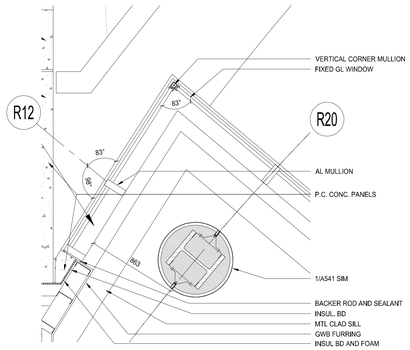

1 PLAN DETAIL AT ROTUNDA NOSE
CORNER MULL AT L1 STRIP WINDOW
1:20

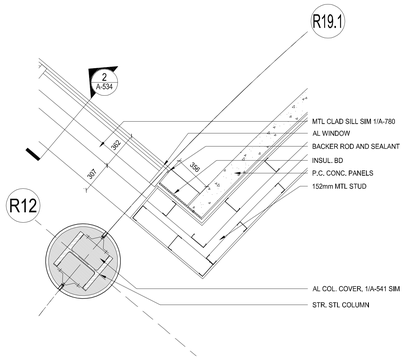

5 PLAN DETAIL AT ROTUNDA NOSE
SIDE MULLION & CORNER AT L1 STRIP WINDOW
1:20

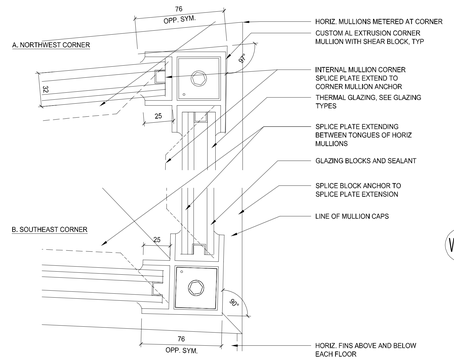

9 PLAN DETAIL
CORNER MULLS AT ROTUNDA NOSE
HFS

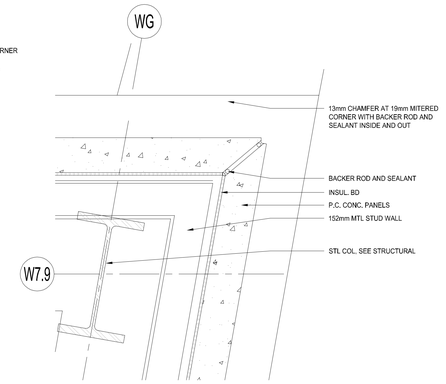

13 PLAN DETAIL AT L2 & ABOVE
TYPICAL PRECAST CORNER & WEST WING WEDGE
1:10

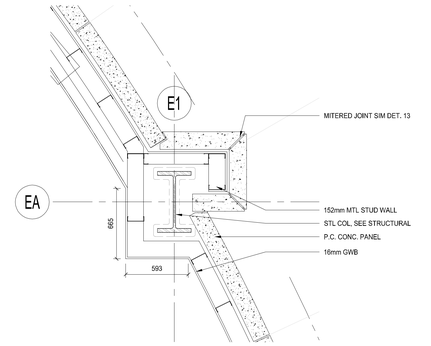

17 PLAN DETAIL
LOWER EAST WING OPENING AT ROTUNDA WALL
1:20

FOR ADDITIONAL NOTES, SEE DET. 18

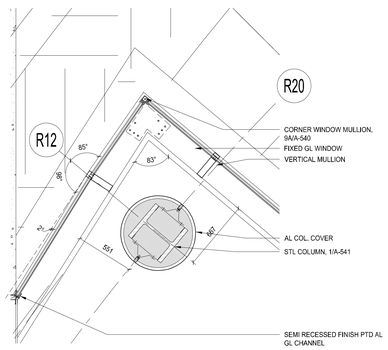

2 PLAN DETAIL AT ROTUNDA NOSE
FLARED CURTAIN WALL CORNER MULLION
1:20

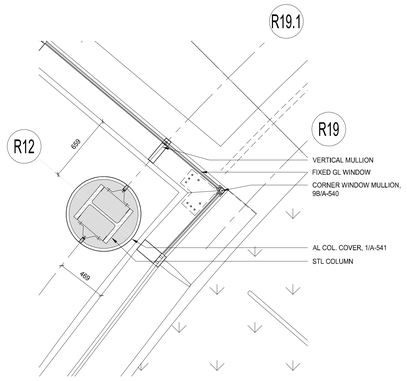

6 PLAN DETAIL AT ROTUNDA NOSE
CURTAIN WALL CORNER AT ROTUNDA FINS
1:20

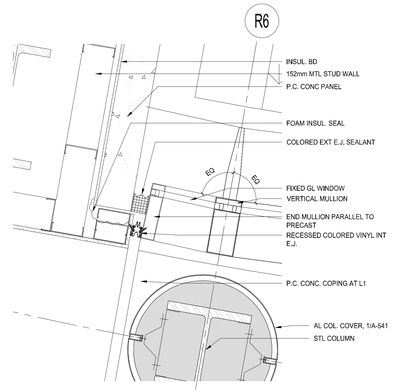

10 PLAN DETAIL AT L2, L3 TO L6 SIM
EAST ROTUNDA GLAZING AT WEST WING WEDGE
1:10

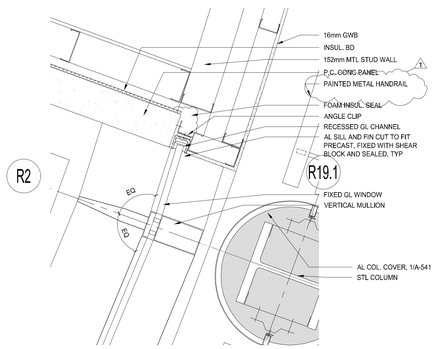

14 PLAN DETAIL AT L2, L3 TO L6 SIM
EAST ROTUNDA GLAZING AT EAST WING WEDGE
1:10

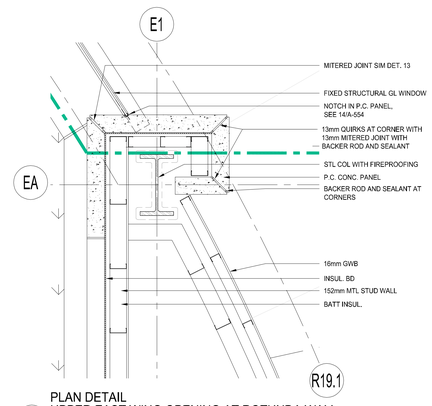

18 PLAN DETAIL
UPPER EAST WING OPENING AT ROTUNDA WALL
1:20

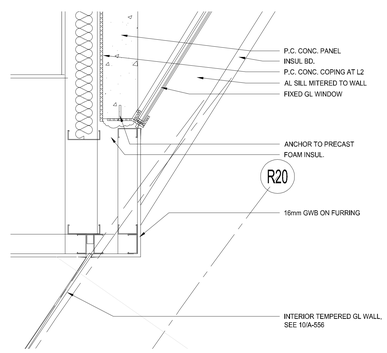

3 PLAN DETAIL AT L2, L3 TO L6 SIM
WEST WING AT ROTUNDA NOSE
1:10

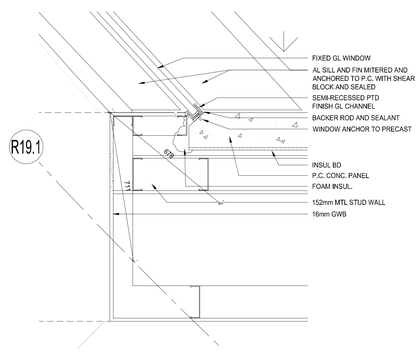

7 PLAN DETAIL AT L2, L3 TO L6 SIM
WEST ROTUNDA GLAZING AT WEST WING WEDGE
1:10

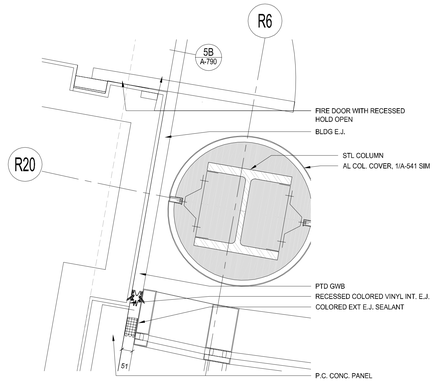

11 PLAN DETAIL AT L3 TO L6
SOUTH ROTUNDA GLAZING AT WEST WING
1:10

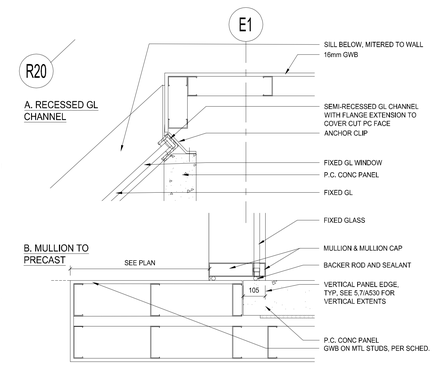

15 PLAN DETAIL AT L3 TO L6
SOUTH ROTUNDA GLAZING AT EAST WING
1:10

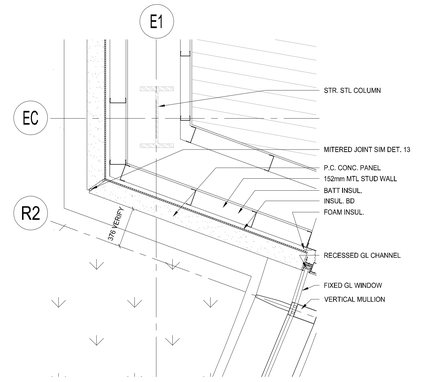

19 PLAN DETAIL AT L2, L3-L6 SIM
OUTSIDE PC CORNER AT EAST WING WEDGE
1:20

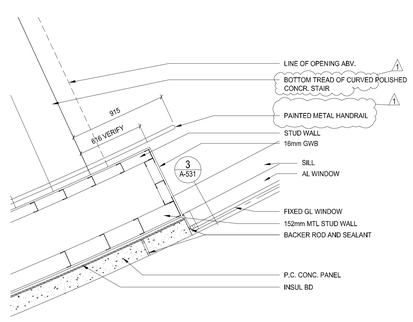

4 PLAN DETAIL AT L1
SO. ROTUNDA WINDOW, WEST JAMB
1:10

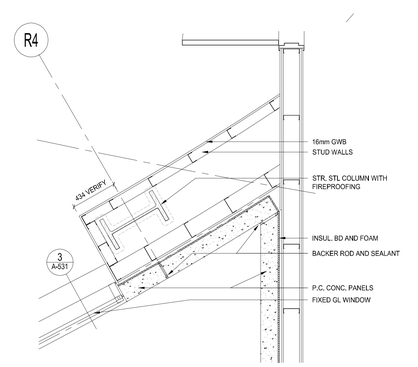

8 PLAN DETAIL AT L1
SO. ROTUNDA WINDOW, EAST JAMB
1:20

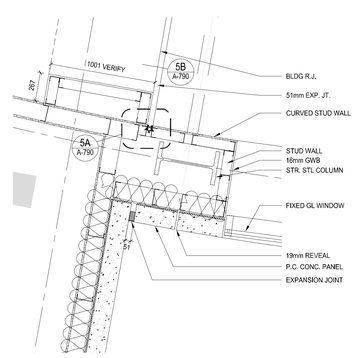

12 PLAN DETAIL
WEST WINDOW JAMB AT L2 SOUTH LOBBY
1:20

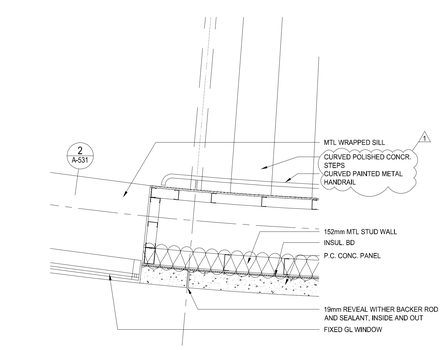

16 PLAN DETAIL
EAST WINDOW JAMB AT L2 SOUTH LOBBY
1:20

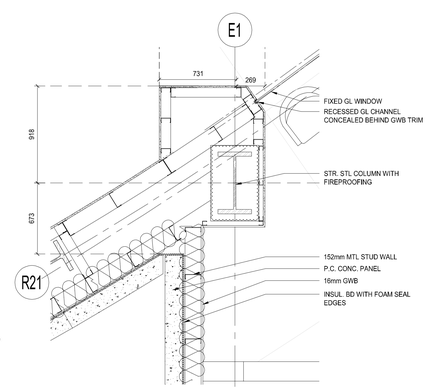

20 PLAN DETAIL AT L1, L2
SOUTH ROTUNDA WALL AT EAST WING
1:20

PROPERTY OF THE UNITED STATES GOVERNMENT - FOR OFFICIAL USE ONLY. Do not remove this notice. Properly destroy documents when no longer needed.

GENERAL SERVICES ADMINISTRATION

UNITED STATES COURTHOUSE
JACKSON, MISSISSIPPI

ARCHITECT:
H3 HARDY COLLABORATION ARCHITECTURE
www.h3hc.com
902 BROADWAY, 19TH FLOOR
NEW YORK, NEW YORK 10010

LOCAL ARCHITECT:
DALE AND ASSOCIATES ARCHITECTS, P.A.
ONE JACKSON PLACE, SUITE 250
188 E. CAPITOL STREET
JACKSON, MS 39201

STRUCTURAL ENGINEER:
WALTER P. MOORE
1845 WOODALL RODGERS FRWY., SUITE 1650
DALLAS, TX 75201-2287

MECHANICAL/PLUMBING ENGINEER:
COOKE DOUGLASS FARR LEMONS
3780 I-55 NORTH, STE 101
JACKSON, MS 39211

ELECTRICAL ENGINEER:
WATKINS O'GWYNN
4523 OFFICE PARK DRIVE
JACKSON, MS 39206

CIVIL ENGINEER:
SPENCER-ENGINEERS, INC.
P.O. BOX 4328
JACKSON, MS 39296

LIGHTING:
FISHER MARANTZ STONE
22 WEST 19TH STREET
NEW YORK, NY 10011

ACOUSTICS:
POLYSONICS
5115 MACARTHUR BLVD, NW
WASHINGTON, D.C. 20016

BLAST ENGINEERING:
HINMAN CONSULTING ENGINEERS
356 FIFTH AVENUE, SUITE 4715
NEW YORK, NY 10118

FIRE AND LIFE SAFETY:
ROLF JENSEN & ASSOCIATES
13831 NORTHWEST FREEWAY, SUITE 330
HOUSTON, TX 77040

SECURITY:
SYSTECH GROUP INC.
11260 ROGER BACON DRIVE, SUITE 501
RESTON, VA 20190

COURTS SECURITY:
TYCO FIRE & SECURITY ADT
3601 EISENHOWER AVENUE, THIRD FLOOR
ALEXANDRIA , VA 22304

COURTS TECHNOLOGY:
ELECTRONICS INTERIORS, INC.
1310 SIBLEY MEMORIAL HIGHWAY
MENDOTA, MN 55150

LEED CONSULTING:
THE EPSTEN GROUP, INC.
303 FERGUSON STREET
ATLANTA, GA 30307

VERTICAL TRANSPORTATION:
VAN DEUSEN ASSOCIATES
5 REGENT STREET, SUITE 524
LIVINGSTON, NJ 07039

COST ESTIMATING:
CONSTRUCTION COST SYSTEMS
200 WEST 22ND STREET, SUITE 209
LOMBARD, IL 60148

SIGNAGE:
TWO TWELVE ASSOCIATES, INC.
902 BROADWAY, 20TH FLOOR
NEW YORK, NY 10010

CERTIFICATIONS

KEY PLAN

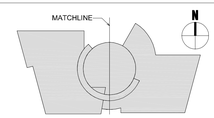

REVISION NOTES

MARK	DATE	DESCRIPTION
1	8/16/2007	VE CHANGES

GRAPHIC SCALE

CONTRACTORS

A/E CON. NO.	
A/E TASK NO.	
CONS. CONTR.	
CONS. WORK	
PRIME A/E	
SUB A/E	
CONSTR. CON.	

BUILDING

NAME	UNITED STATES FEDERAL COURTHOUSE
STREET	COURT STREET
CITY/ST./ZIP	JACKSON, MS 39401
BUILDING NO.	-
OTHER	-
BUILDING NOs.	
FACILITY CODE	-

PROJECT

PROJECT TITLE	NEW UNITED STATES FEDERAL COURTHOUSE JACKSON, MS
PROJECT DESCRIPTION	COURTHOUSE
PROJECT NO.	MS 00149
GSA PM	LAURA SHADIX
SUBMISSION	100% CONSTRUCTION DOC
SUB. DATE	10 September 2007

DRAWING

DRAWING TITLE	ENLARGED PLAN DETAILS
FILE NAME	A-540.dwg
FLOOR NO.	
DRAWN BY	PH
DATE DRAFTED:	
CHECKED BY	-
SHEET SIZE:	914 X 1219
DRAWING NO.	**A 540**
DISCIPLINE / SHEET TYPE / SEQUENCE	
SHEET	OF

K:\Jackson Courthouse\ADD design\AS-BUS CD\BD\BPN-DWG\SA-540-plan det 1.dwg, 9/3/2007 12:47:30 PM

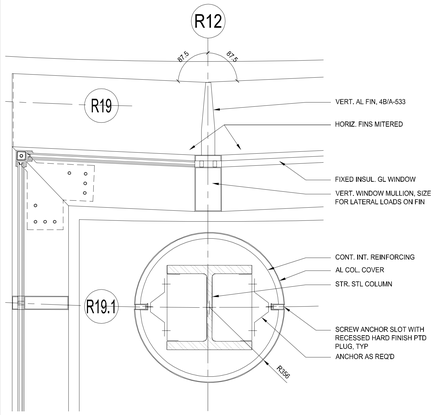

1 PLAN DETAIL
COLUMN AT ROTUNDA NOSE
1:10

SEE ELEVATION 10,14,18

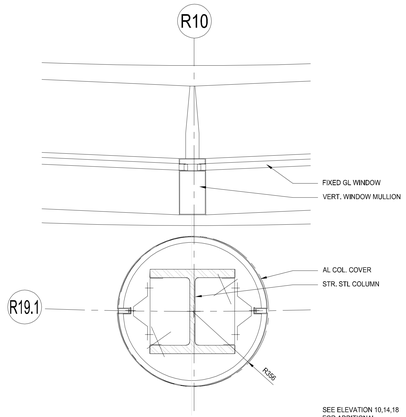

5 PLAN DETAIL
TYPICAL COLUMN COVER AT ROTUNDA CURTAIN WALL
1:10

SEE ELEVATION 10,14,18 FOR ADDITIONAL NOTES SEE DET. 1

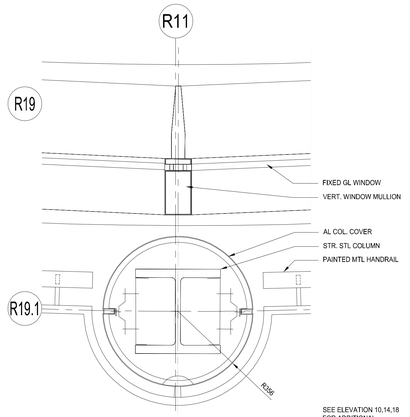

9 PLAN DETAIL
TYPICAL COLUMN COVER AT RAMP RAILING
1:10

SEE ELEVATION 10,14,18 FOR ADDITIONAL NOTES SEE DET. 1

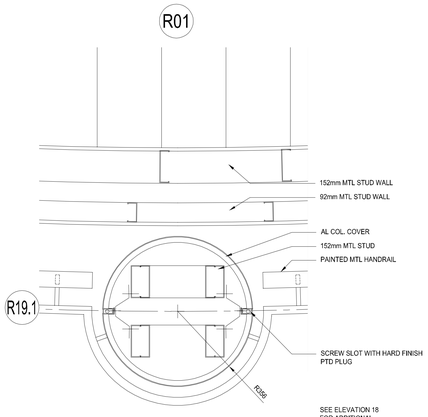

13 PLAN DETAIL
TYPICAL FAUX COLUMN COVER AT RAMP RAILING
1:10

SEE ELEVATION 18 FOR ADDITIONAL NOTES SEE DET. 1

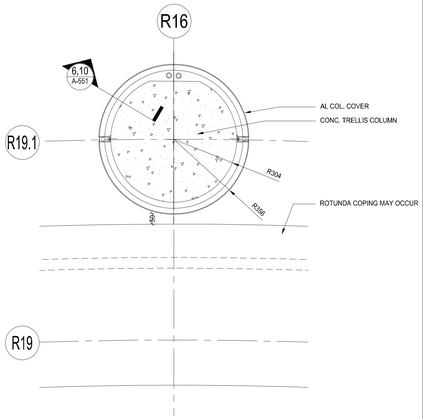

17 PLAN DETAIL
TRELLIS COLUMN COVER AT ROTUNDA WALL
1:10

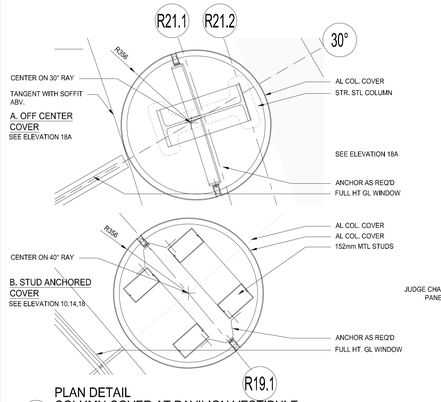

2 PLAN DETAIL
COLUMN COVER AT PAVILION VESTIBULE
1:10

FOR ADDITIONAL NOTES SEE DET. 1

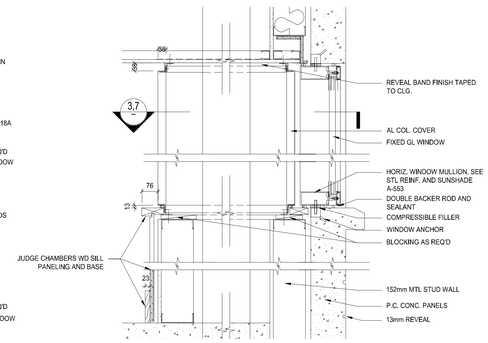

6 PLAN DETAIL
COLUMN COVER AT CORNER OFFICE
1:10

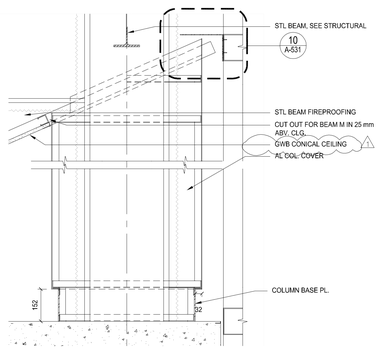

10 SECTION DETAIL
COLUMN COVER AT ANGLED ROTUNDA CEILING
1:10

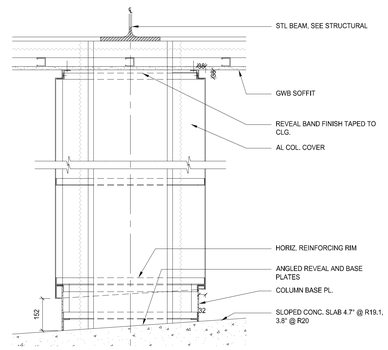

14 SECTION DETAIL
COLUMN COVER AT RAMP
1:10

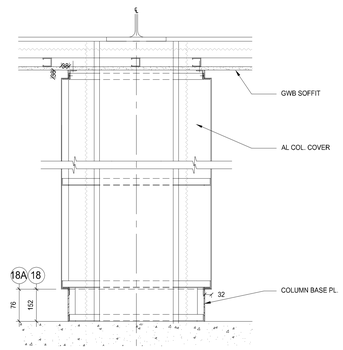

18A 18 SECTION DETAIL
COLUMN COVER AT FLAT FLOOR & CEILING
1:10

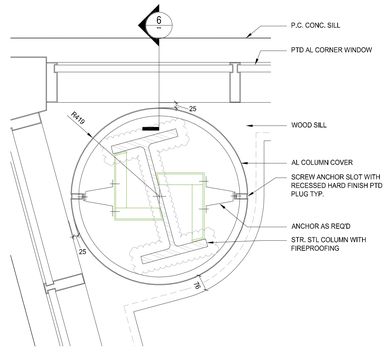

3 PLAN DETAIL
COLUMN COVER AT JUDGES CHAMBERS
1:10

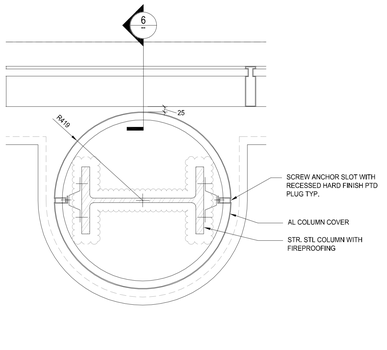

7 PLAN DETAIL
COLUMN COVER AT JUDGES CHAMBERS
1:10

FOR ADDITIONAL NOTES SEE DET. 3

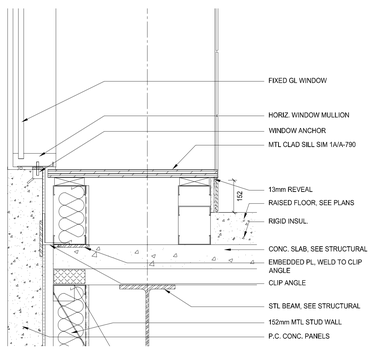

11 SECTION DETAIL
WINDOW SILL AT L2 LOBBY
1:10

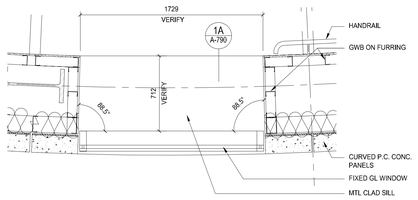

15 PLAN DETAIL
MTL CLAD SILL AT TOP OF L2 LOBBY STAIR
1:20

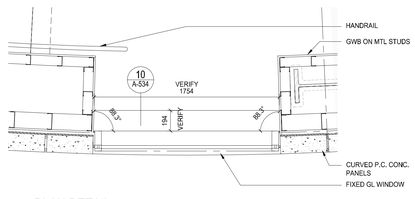

19 PLAN DETAIL
AL BOX SILL AT L1 LOBBY STAIR
1:20

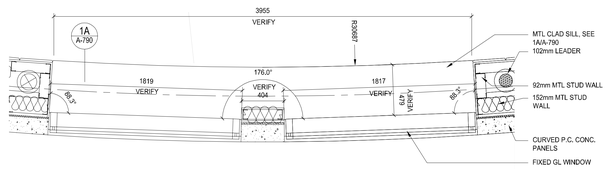

16 PLAN DETAIL
MTL CLAD SILL AT PAVILION WALL
1:10

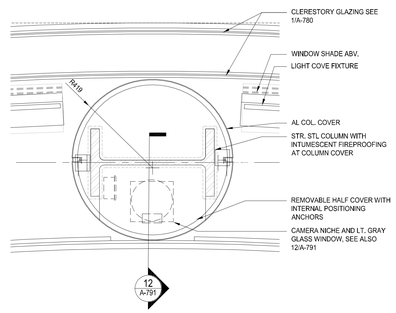

4 PLAN DETAIL
BAY WINDOW
1:10

FOR ADDITIONAL NOTES SEE DET. 3

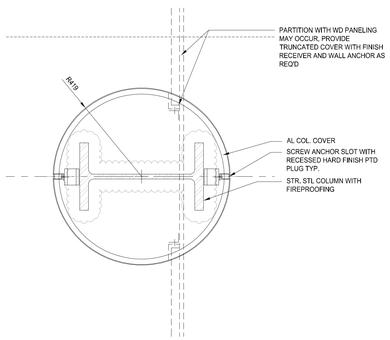

8 PLAN DETAIL
COLUMN COVER AT BAY WINDOW
1:10

FOR ADDITIONAL NOTES SEE DET. 3

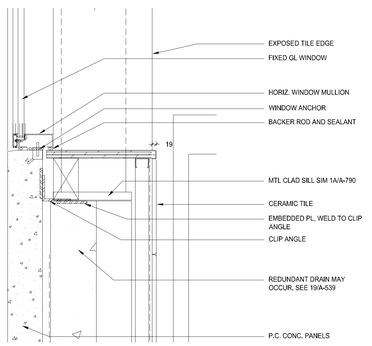

12 SECTION DETAIL
WINDOW SILL AT PAVILION WALL
1:10

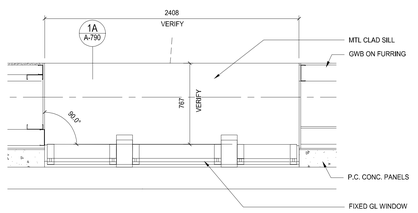

20 PLAN DETAIL
METAL CLAD SILL AT DBL. HT. ROTUNDA LOBBY
1:20

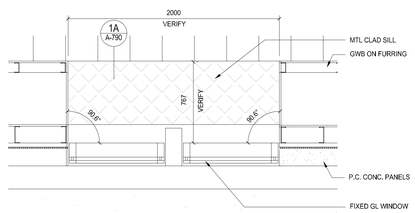

21 PLAN DETAIL
MTL CLAD SILL AT MARSHALS STAIR
1:20

PROPERTY OF THE UNITED STATES GOVERNMENT - FOR OFFICIAL USE ONLY. Do not remove this notice. Properly destroy documents when no longer needed.

GENERAL SERVICES ADMINISTRATION

UNITED STATES COURTHOUSE

JACKSON, MISSISSIPPI

ARCHITECT:
H3 HARDY COLLABORATION ARCHITECTURE
www.h3hc.com
902 BROADWAY, 19TH FLOOR
NEW YORK, NEW YORK 10010

LOCAL ARCHITECT:
DALE AND ASSOCIATES ARCHITECTS, P.A.
ONE JACKSON PLACE, SUITE 250
188 E. CAPITOL STREET
JACKSON, MS 39201

STRUCTURAL ENGINEER:
WALTER P. MOORE
1845 WOODALL RODGERS FRWY., SUITE 1650
DALLAS, TX 75201-2287

MECHANICAL/PLUMBING ENGINEER:
COOKE DOUGLASS FARR LEMONS
3780 I-55 NORTH, STE 101
JACKSON, MS 39211

ELECTRICAL ENGINEER:
WATKINS O'GWYNN
4523 OFFICE PARK DRIVE
JACKSON, MS 39206

CIVIL ENGINEER:
SPENCER-ENGINEERS, INC.
P.O. BOX 4328
JACKSON, MS 39296

LIGHTING:
FISHER MARANTZ STONE
22 WEST 19TH STREET
NEW YORK, NY 10011

ACOUSTICS:
POLYSONICS
5115 MACARTHUR BLVD, NW
WASHINGTON, D.C. 20016

BLAST ENGINEERING:
HINMAN CONSULTING ENGINEERS
350 FIFTH AVENUE, SUITE 4715
NEW YORK, NY 10118

FIRE AND LIFE SAFETY:
ROLF JENSEN & ASSOCIATES
13831 NORTHWEST FREEWAY, SUITE 330
HOUSTON, TX 77040

SECURITY:
SYSTECH GROUP INC.
11260 ROGER BACON DRIVE, SUITE 501
RESTON, VA 20190

COURTS SECURITY:
TYCO FIRE & SECURITY ADT
3601 EISENHOWER AVENUE, THIRD FLOOR
ALEXANDRIA , VA 22304

COURTS TECHNOLOGY:
ELECTRONICS INTERIORS, INC.
1310 SIBLEY MEMORIAL HIGHWAY
MENDOTA, MN 55150

LEED CONSULTING:
THE EPSTEN GROUP, INC.
303 FERGUSON STREET
ATLANTA, GA 30307

VERTICAL TRANSPORTATION:
VAN DEUSEN ASSOCIATES
5 REGENT STREET, SUITE 524
LIVINGSTON, NJ 07039

COST ESTIMATING:
CONSTRUCTION COST SYSTEMS
200 WEST 22ND STREET, SUITE 209
LOMBARD, IL 60148

SIGNAGE:
TWO TWELVE ASSOCIATES, INC.
902 BROADWAY, 20TH FLOOR
NEW YORK, NY 10010

CERTIFICATIONS

KEY PLAN

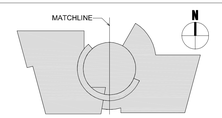

REVISION NOTES

MARK	DATE	DESCRIPTION
1	8/16/2007	VE CHANGES

GRAPHIC SCALE

CONTRACTORS

A/E CON. NO.	
A/E TASK NO.	
CONS. CONTR.	
CONS. WORK	
PRIME A/E	
SUB A/E	
CONSTR. CON.	

BUILDING

NAME	UNITED STATES FEDERAL COURTHOUSE
STREET	COURT STREET
CITY/ST./ZIP	JACKSON, MS 39401
BUILDING NO.	-
OTHER	-
BUILDING NOs.	
FACILITY CODE	-

PROJECT

PROJECT TITLE	NEW UNITED STATES FEDERAL COURTHOUSE JACKSON, MS
PROJECT DESCRIPTION	COURTHOUSE
PROJECT NO.	MS 00149
GSA PM	LAURA SHADIX
SUBMISSION	100% CONSTRUCTION DOC
SUB. DATE	10 September 2007

DRAWING

DRAWING TITLE	ENLARGED PLAN DETAILS
FILE NAME	A-541.dwg
FLOOR NO.	
DRAWN BY	PH
CHECKED BY	-
DATE DRAFTED:	
SHEET SIZE:	914 X 1219
DRAWING NO.	A 541
DISCIPLINE / SHEET TYPE / SEQUENCE	
SHEET	OF

K:\Jackson Courthouse\ADD design\AUS.05 D\05\09\09-09\05\A-541-plan det 2.dwg, 9/5/2007 12:24:25 PM

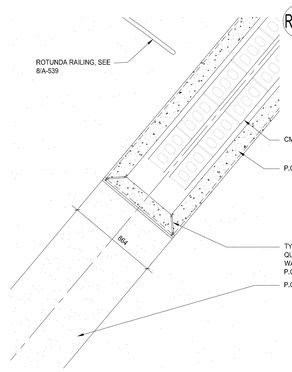

1 PLAN DETAIL
LONG WALL END AT ROTUNDA
1:20

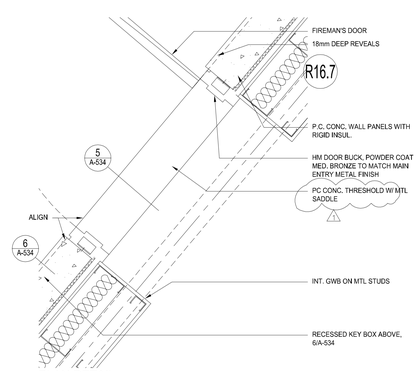

5 PLAN DETAIL
LONG WALL TO REAR PAVILION WALL
1:10

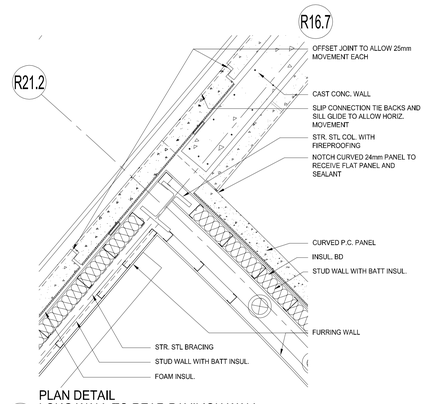

9 PLAN DETAIL
LONG WALL TO REAR PAVILION WALL
1:20

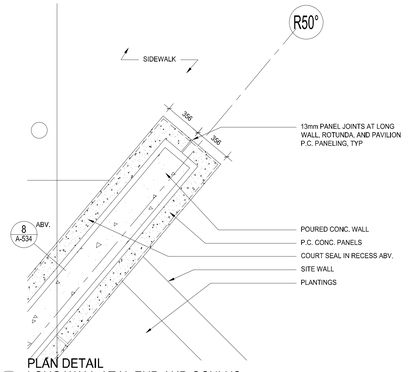

17 PLAN DETAIL
LONG WALL AT N. END AND OCULUS
1:20

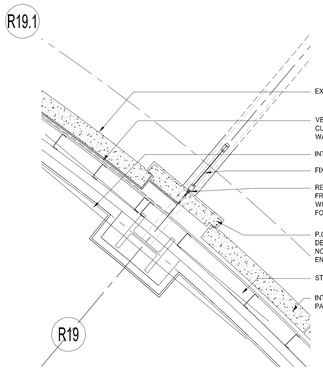

2 PLAN DETAIL
NORTH ROTUNDA WALL AT MAIN ENTRY
1:20

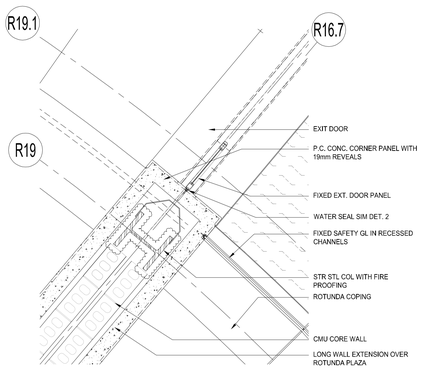

6 PLAN DETAIL OF LONG WALL
LONG WALL OPENING AT MAIN ENTRY SOUTH
1:20

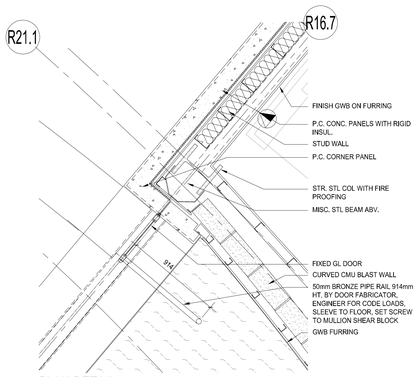

10 PLAN DETAIL
LONG WALL OPENING AT MAIN ENTRY NORTH
1:20

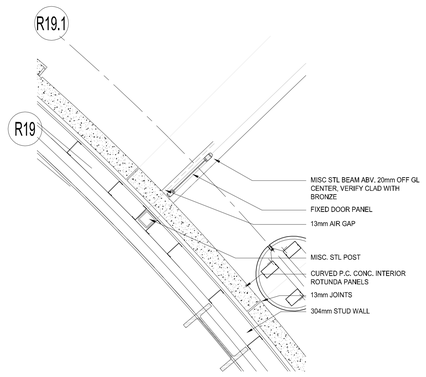

14 PLAN DETAIL AT WALL
PAVILION AND VESTIBULE GLAZING AT ROTUNDA WALL
1:20

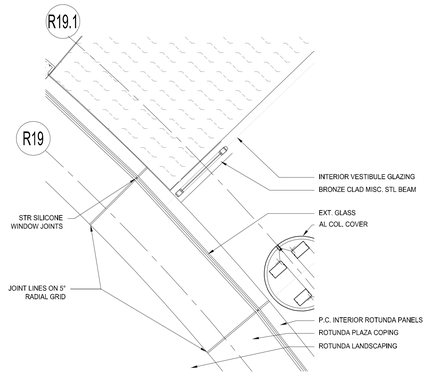

18 PLAN DETAIL AT WINDOWS
PAVILION AND VESTIBULE GLAZING AT ROTUNDA WALL
1:20

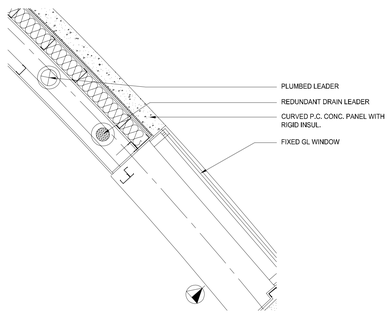

7 PLAN DETAIL
LT. WINDOW JAMBS AT E PAVILION WALL
1:20

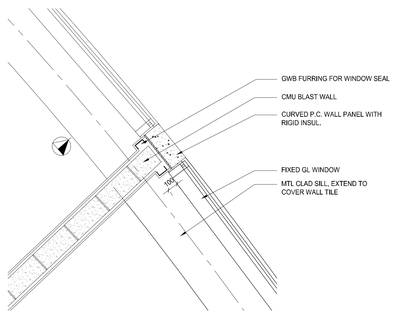

11 PLAN DETAIL
MIDDLE WINDOW JAMBS AT PAVILION
1:20

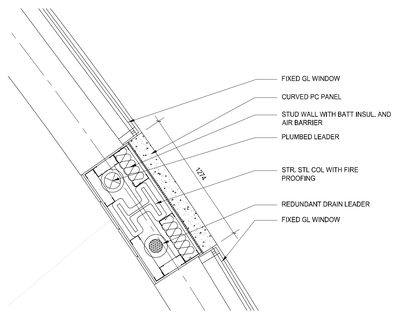

15 PLAN DETAIL
RT. WINDOW JAMBS AT L2 LOBBY
1:20

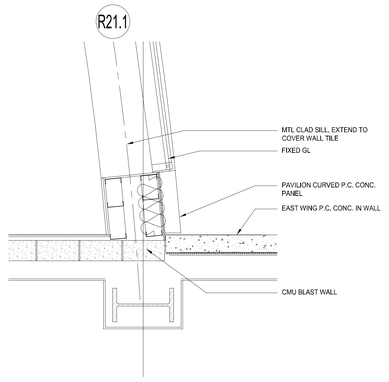

19 PLAN DETAIL
PAVILION REAR WALL AT EAST WING
1:20

PROPERTY OF THE UNITED STATES GOVERNMENT - FOR OFFICIAL USE ONLY. Do not remove this notice. Properly destroy documents when no longer needed.

GENERAL SERVICES ADMINISTRATION

UNITED STATES COURTHOUSE
JACKSON, MISSISSIPPI

ARCHITECT:
H3 HARDY COLLABORATION ARCHITECTURE
www.h3hc.com
902 BROADWAY, 19TH FLOOR
NEW YORK, NEW YORK 10010

LOCAL ARCHITECT:
DALE AND ASSOCIATES ARCHITECTS, P.A.
ONE JACKSON PLACE, SUITE 250
188 E. CAPITOL STREET
JACKSON, MS 39201

STRUCTURAL ENGINEER:
WALTER P. MOORE
1845 WOODALL RODGERS FRWY., SUITE 1650
DALLAS, TX 75201-2287

MECHANICAL/PLUMBING ENGINEER:
COOKE DOUGLASS FARR LEMONS
3780 I-55 NORTH, STE 101
JACKSON, MS 39211

ELECTRICAL ENGINEER:
WATKINS O'GWYNN
4523 OFFICE PARK DRIVE
JACKSON, MS 39206

CIVIL ENGINEER:
SPENCER-ENGINEERS, INC.
P.O. BOX 4328
JACKSON, MS 39296

LIGHTING:
FISHER MARANTZ STONE
22 WEST 19TH STREET
NEW YORK, NY 10011

ACOUSTICS:
POLYSONICS
5115 MACARTHUR BLVD, NW
WASHINGTON, D.C. 20016

BLAST ENGINEERING:
HINMAN CONSULTING ENGINEERS
350 FIFTH AVENUE, SUITE 4715
NEW YORK, NY 10118

FIRE AND LIFE SAFETY:
ROLF JENSEN & ASSOCIATES
13831 NORTHWEST FREEWAY, SUITE 330
HOUSTON, TX 77040

SECURITY:
SYSTECH GROUP INC.
11260 ROGER BACON DRIVE, SUITE 501
RESTON, VA 20190

COURTS SECURITY:
TYCO FIRE & SECURITY ADT
3601 EISENHOWER AVENUE, THIRD FLOOR
ALEXANDRIA , VA 22304

COURTS TECHNOLOGY:
ELECTRONICS INTERIORS, INC.
1310 SIBLEY MEMORIAL HIGHWAY
MENDOTA, MN 55150

LEED CONSULTING:
THE EPSTEN GROUP, INC.
303 FERGUSON STREET
ATLANTA, GA 30307

VERTICAL TRANSPORTATION:
VAN DEUSEN ASSOCIATES
5 REGENT STREET, SUITE 524
LIVINGSTON, NJ 07039

COST ESTIMATING:
CONSTRUCTION COST SYSTEMS
200 WEST 22ND STREET, SUITE 209
LOMBARD, IL 60148

SIGNAGE:
TWO TWELVE ASSOCIATES, INC.
902 BROADWAY, 20TH FLOOR
NEW YORK, NY 10010

CERTIFICATIONS

KEY PLAN

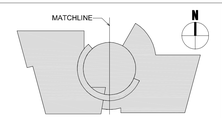

REVISION NOTES

MARK	DATE	DESCRIPTION
1	8/16/2007	VE CHANGES

GRAPHIC SCALE

CONTRACTORS

A/E CON. NO.	
A/E TASK NO.	
CONS. CONTR.	
CONS. WORK	
PRIME A/E	
SUB A/E	
CONSTR. CON.	

BUILDING

NAME	UNITED STATES FEDERAL COURTHOUSE
STREET	COURT STREET
CITY/ST./ZIP	JACKSON, MS 39401
BUILDING NO.	-
OTHER	-
BUILDING NOs.	
FACILITY CODE	-

PROJECT

PROJECT TITLE	NEW UNITED STATES FEDERAL COURTHOUSE JACKSON, MS
PROJECT DESCRIPTION	COURTHOUSE
PROJECT NO.	MS 00149
GSA PM	LAURA SHADIX
SUBMISSION	100% CONSTRUCTION DOC
SUB. DATE	10 September 2007

DRAWING

DRAWING TITLE	ENLARGED EXTERIOR PLAN DETAILS
FILE NAME	A-542.dwg
FLOOR NO.	
DRAWN BY	PH — DATE DRAFTED:
CHECKED BY	- — SHEET SIZE: 914 X 1219
DRAWING NO.	A 542 (DISCIPLINE / SHEET TYPE / SEQUENCE)
	SHEET OF

K:\Jackson\Courthouse\ADS design\AIA.05 D\05\09\09-DWG\SA-542-plan det 1.dwg, 9/3/2007 12:29:10 PM

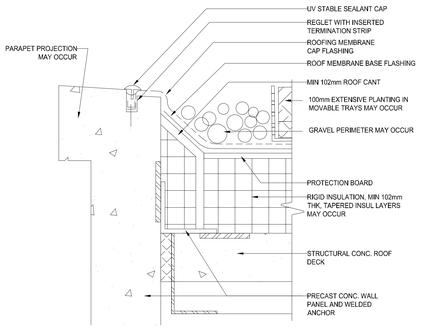

1 SECTION DETAIL
REGLET AT TOP OF WALL PANEL
1:5

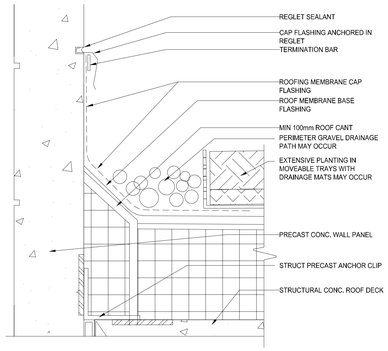

5 SECTION DETAIL
ROOF EDGE FLASHING AT PRECAST
1:5

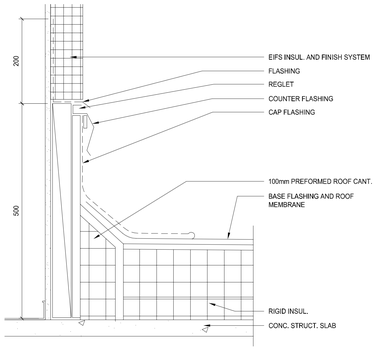

9 SECTION DETAIL
ROOF EDGE FLASHING AT EIFS WALL
1:5

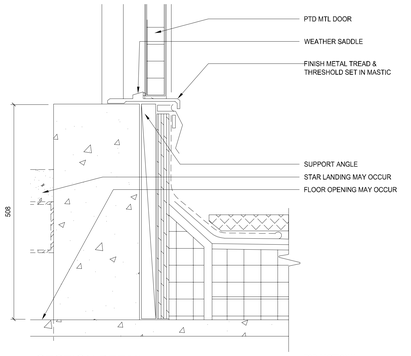

FOR ADDITIONAL NOTES SEE DET. 9

17 SECTION DETAIL
SILL AND FLASHING AT ROOF DOOR
1:5

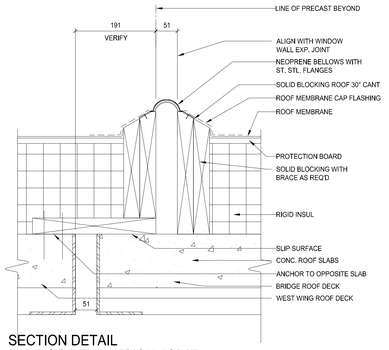

2 SECTION DETAIL
MID ROOF EXPANSION JOINT
1:5

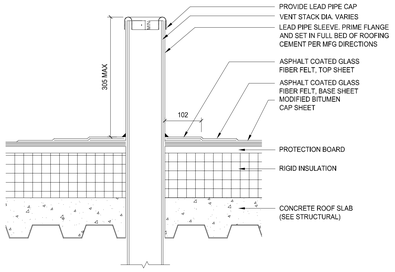

6 SECTION DETAIL
VENT STACK FLASHING
1:5

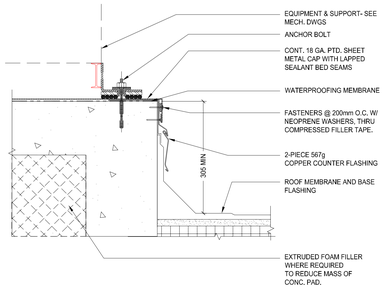

10 SECTION DETAIL
ROOF EDGE AT MECH EQUIP PAD
1:5

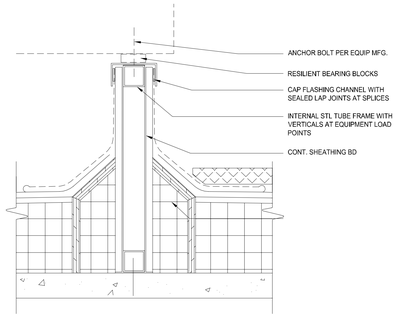

FOR ADDITIONAL NOTES, SEE DET. 9

14 SECTION DETAIL
MECH. EQUIPMENT CURB OR EQ
1:5

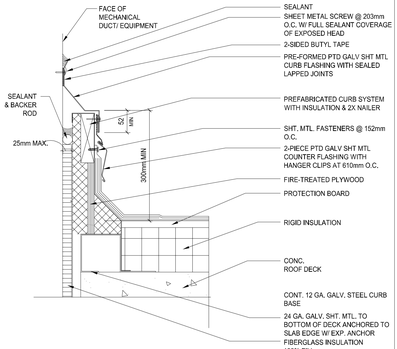

18 SECTION DETAIL
CURB AT MECH EQUIP. PENETRATION
1:5

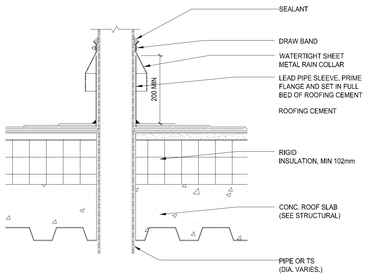

3 SECTION DETAIL
PIPE THRU ROOF FLASHING
1:5

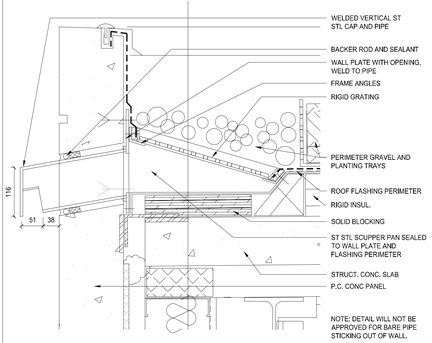

FOR ADDITIONAL NOTES, SEE DET. 1

4 SECTION DETAIL
PIPE SCUPPER DETAIL
1:5

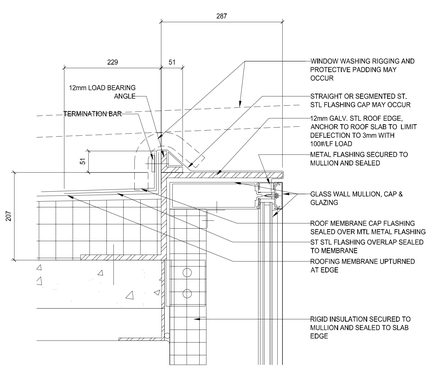

8 SECTION DETAIL
CURTAIN WALL CAP FLASHING
1:5

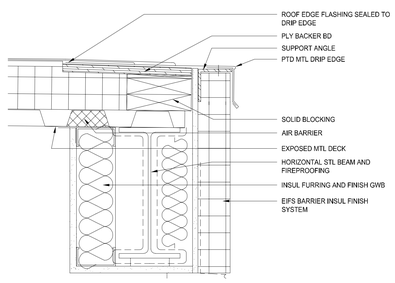

12 SECTION DETAIL
ROOF DRIP EDGE AT EIFS WALL
1:5

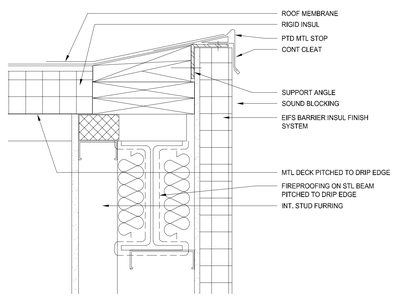

16 SECTION DETAIL
GRAVEL STOP EDGE AT EIFS WALL
1:5

PROPERTY OF THE UNITED STATES GOVERNMENT - FOR OFFICIAL USE ONLY. Do not remove this notice. Properly destroy documents when no longer needed.

GENERAL SERVICES ADMINISTRATION

UNITED STATES COURTHOUSE
JACKSON, MISSISSIPPI

ARCHITECT:
H3 HARDY COLLABORATION ARCHITECTURE
www.h3hc.com
902 BROADWAY, 19TH FLOOR
NEW YORK, NEW YORK 10010

LOCAL ARCHITECT:
DALE AND ASSOCIATES ARCHITECTS, P.A.
ONE JACKSON PLACE, SUITE 250
188 E. CAPITOL STREET
JACKSON, MS 39201

STRUCTURAL ENGINEER:
WALTER P. MOORE
1845 WOODALL RODGERS FRWY., SUITE 1650
DALLAS, TX 75201-2287

MECHANICAL/PLUMBING ENGINEER:
COOKE DOUGLASS FARR LEMONS
3780 I-55 NORTH, STE 101
JACKSON, MS 39211

ELECTRICAL ENGINEER:
WATKINS O'GWYNN
4523 OFFICE PARK DRIVE
JACKSON, MS 39206

CIVIL ENGINEER:
SPENCER-ENGINEERS, INC.
P.O. BOX 4328
JACKSON, MS 39296

LIGHTING:
FISHER MARANTZ STONE
22 WEST 19TH STREET
NEW YORK, NY 10011

ACOUSTICS:
POLYSONICS
5115 MACARTHUR BLVD, NW
WASHINGTON, D.C. 20016

BLAST ENGINEERING:
HINMAN CONSULTING ENGINEERS
350 FIFTH AVENUE, SUITE 4715
NEW YORK, NY 10118

FIRE AND LIFE SAFETY:
ROLF JENSEN & ASSOCIATES
13831 NORTHWEST FREEWAY, SUITE 330
HOUSTON, TX 77040

SECURITY:
SYSTECH GROUP INC.
11260 ROGER BACON DRIVE, SUITE 501
RESTON, VA 20190

COURTS SECURITY:
TYCO FIRE & SECURITY ADT
3601 EISENHOWER AVENUE, THIRD FLOOR
ALEXANDRIA , VA 22304

COURTS TECHNOLOGY:
ELECTRONICS INTERIORS, INC.
1310 SIBLEY MEMORIAL HIGHWAY
MENDOTA, MN 55150

LEED CONSULTING:
THE EPSTEN GROUP, INC.
303 FERGUSON STREET
ATLANTA, GA 30307

VERTICAL TRANSPORTATION:
VAN DEUSEN ASSOCIATES
5 REGENT STREET, SUITE 524
LIVINGSTON, NJ 07039

COST ESTIMATING:
CONSTRUCTION COST SYSTEMS
200 WEST 22ND STREET, SUITE 209
LOMBARD, IL 60148

SIGNAGE:
TWO TWELVE ASSOCIATES, INC.
902 BROADWAY, 20TH FLOOR
NEW YORK, NY 10010

CERTIFICATIONS

KEY PLAN

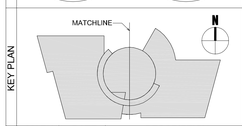

REVISION NOTES

MARK	DATE	DESCRIPTION
1	8/16/2007	VE CHANGES

GRAPHIC SCALE

CONTRACTORS

A/E CON. NO.	
A/E TASK NO.	
CONS. CONTR.	
CONS. WORK	
PRIME A/E	
SUB A/E	
CONSTR. CON.	

BUILDING

NAME	UNITED STATES FEDERAL COURTHOUSE
STREET	COURT STREET
CITY/ST./ZIP	JACKSON, MS 39401
BUILDING NO.	-
OTHER	-
BUILDING NOs.	
FACILITY CODE	-

PROJECT

PROJECT TITLE	NEW UNITED STATES FEDERAL COURTHOUSE JACKSON, MS
PROJECT DESCRIPTION	COURTHOUSE
PROJECT NO.	MS 00149
GSA PM	LAURA SHADIX
SUBMISSION	100% CONSTRUCTION DOC
SUB. DATE	10 September 2007

DRAWING

DRAWING TITLE	TYPICAL ROOF DETAILS
FILE NAME	A-538.dwg
FLOOR NO.	
DRAWN BY	PH
DATE DRAFTED:	
CHECKED BY	-
SHEET SIZE:	914 X 1219
DRAWING NO.	A 538
DISCIPLINE / SHEET TYPE / SEQUENCE	
SHEET	OF

K:\Jackson\Courthouse\ADD delay\AIA.05 CD\05\09\09-DWG\AIA 538-roof det.dwg, 9/3/2007 12:40:07 PM

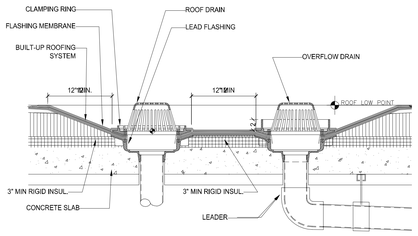

NOTES:
1. MINIMUM 760mm², 1.2kg. LEAD FLASHING, SET OF ROOFING MEMBRANE IN MASTIC
2. MEMBRANE PLIES AND LEAD FLASHING EXTEND UNDER CLAMPING RING.
3. MEMBRANE FLASHING EXTENDS 100mm BEYOND EDGE OF LEAD FLASHING.
4. NO "COUPLING" ABOVE THE ELECTRICAL CONDUITS

1 SECTION DETAIL
TYPICAL ROOF DRAIN
1:10

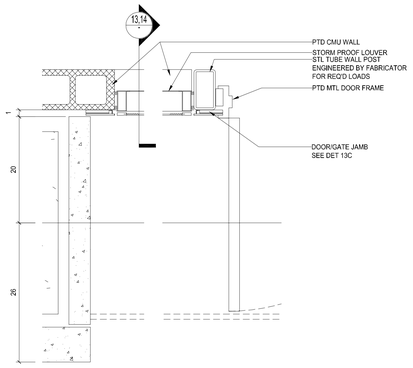

5 PLAN DETAIL
P1 ENTRY LEFT SIDE
1:10

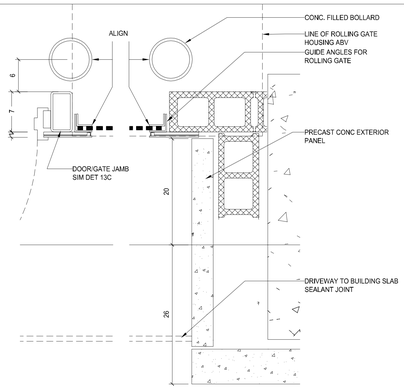

8 PLAN DETAIL
P1 ENTRY LEFT SIDE
1:10

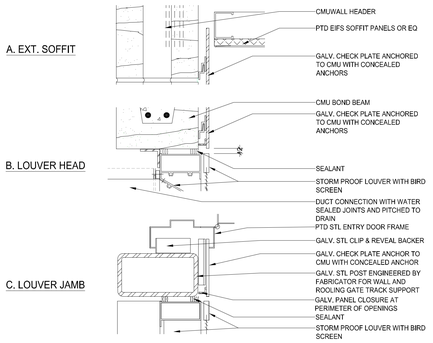

13 SECTION DETAIL
PARKING ENTRY WALL LOUVER
1:5

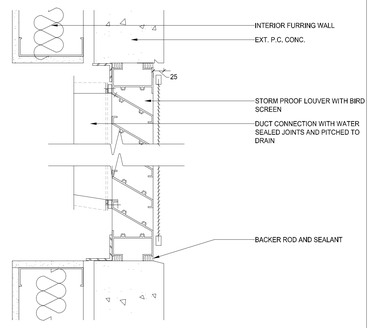

17 SECTION DETAIL
LOUVER OPENING AT PRECAST WALL
1:5

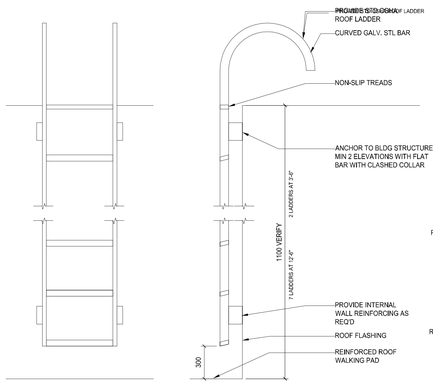

2 ELEVATION DETAIL
ROOF ACCESS LADDER
1:10

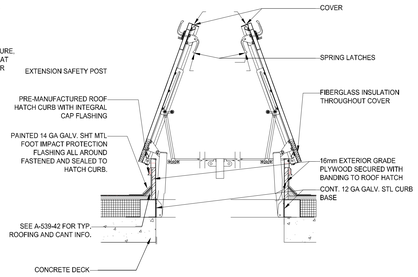

6 SECTION DETAIL
ROOF ACCESS LADDER
1:10

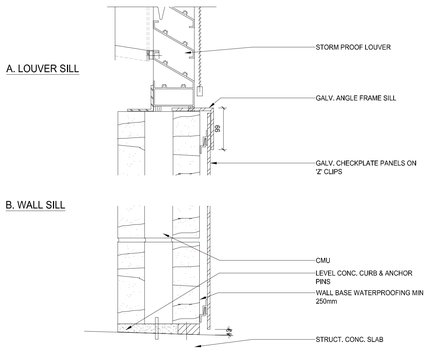

14 SECTION DETAIL
PARKING ENTRY WALL LOUVER
1:5

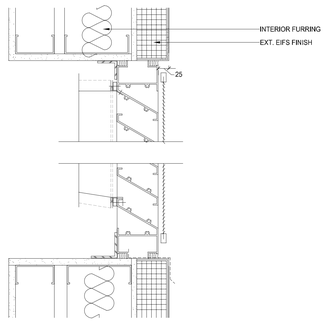

18 SECTION DETAIL
LOUVER OPENING AT EIFS WALL
1:5

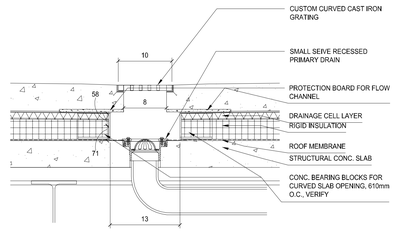

3 SECTION DETAIL
PRIMARY UNDER PLAZA GREEN ROOF DRAIN
1:10

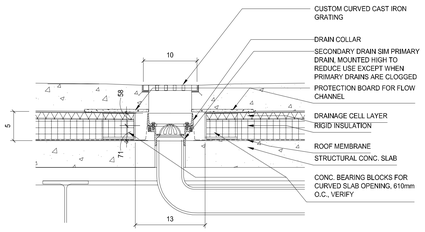

7 SECTION DETAIL
SECONDARY UNDER PLAZA GREEN ROOF DRAIN
1:10

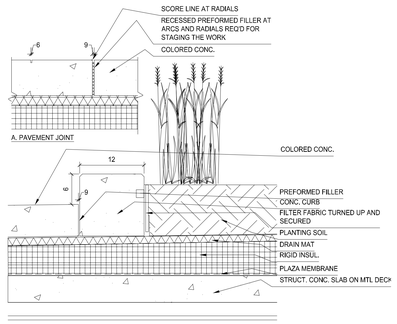

10 SECTION DETAIL
PLAZA PAVING DETAILS
1:10

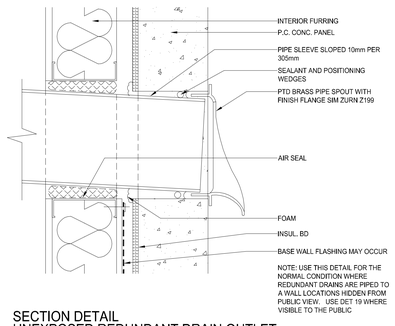

NOTE: USE THIS DETAIL FOR THE NORMAL CONDITION WHERE REDUNDANT DRAINS ARE PIPED TO A WALL LOCATIONS HIDDEN FROM PUBLIC VIEW. USE DET 19 WHERE VISIBLE TO THE PUBLIC

15 SECTION DETAIL
UNEXPOSED REDUNDANT DRAIN OUTLET
1:5

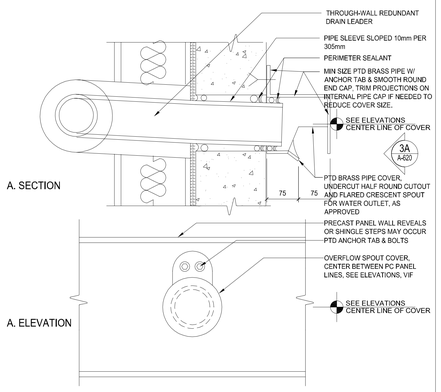

19 SECTION DETAIL
EXPOSED REDUNDANT DRAIN OUTLET
1:5

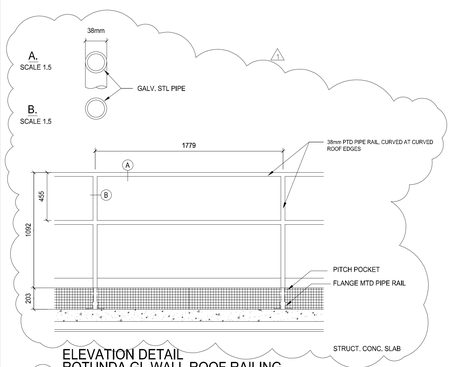

4 ELEVATION DETAIL
ROTUNDA GL WALL ROOF RAILING
1:20

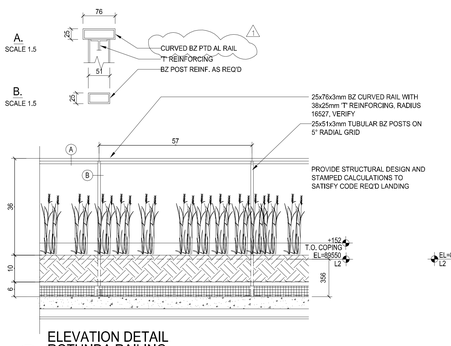

8 ELEVATION DETAIL
ROTUNDA RAILING
1:20

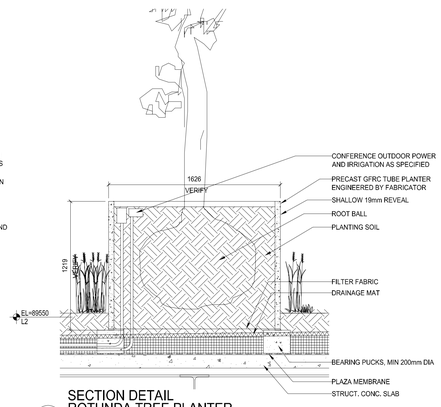

12 SECTION DETAIL
ROTUNDA TREE PLANTER
1:20

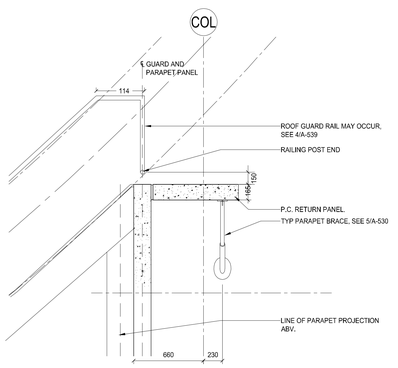

16 PLAN DETAIL
RAILING TERMINUS AND PARAPET RETURN
1:20

PROPERTY OF THE UNITED STATES GOVERNMENT - FOR OFFICIAL USE ONLY. Do not remove this notice. Properly destroy documents when no longer needed.

GENERAL SERVICES ADMINISTRATION

UNITED STATES COURTHOUSE
JACKSON, MISSISSIPPI

ARCHITECT:
H3 HARDY COLLABORATION ARCHITECTURE
www.h3hc.com
902 BROADWAY, 19TH FLOOR
NEW YORK, NEW YORK 10010

LOCAL ARCHITECT:
DALE AND ASSOCIATES ARCHITECTS, P.A.
ONE JACKSON PLACE, SUITE 250
188 E. CAPITOL STREET
JACKSON, MS 39201

STRUCTURAL ENGINEER:
WALTER P. MOORE
1845 WOODALL RODGERS FRWY., SUITE 1650
DALLAS, TX 75201-2287

MECHANICAL/PLUMBING ENGINEER:
COOKE DOUGLASS FARR LEMONS
3780 I-55 NORTH, STE 101
JACKSON, MS 39211

ELECTRICAL ENGINEER:
WATKINS O'GWYNN
4523 OFFICE PARK DRIVE
JACKSON, MS 39206

CIVIL ENGINEER:
SPENCER-ENGINEERS, INC.
P.O. BOX 4328
JACKSON, MS 39296

LIGHTING:
FISHER MARANTZ STONE
22 WEST 19TH STREET
NEW YORK, NY 10011

ACOUSTICS:
POLYSONICS
5115 MACARTHUR BLVD, NW
WASHINGTON, D.C. 20016

BLAST ENGINEERING:
HINMAN CONSULTING ENGINEERS
350 FIFTH AVENUE, SUITE 4715
NEW YORK, NY 10118

FIRE AND LIFE SAFETY:
ROLF JENSEN & ASSOCIATES
13831 NORTHWEST FREEWAY, SUITE 330
HOUSTON, TX 77040

SECURITY:
SYSTECH GROUP INC.
11260 ROGER BACON DRIVE, SUITE 501
RESTON, VA 20190

COURTS SECURITY:
TYCO FIRE & SECURITY ADT
3601 EISENHOWER AVENUE, THIRD FLOOR
ALEXANDRIA , VA 22304

COURTS TECHNOLOGY:
ELECTRONICS INTERIORS, INC.
1310 SIBLEY MEMORIAL HIGHWAY
MENDOTA, MN 55150

LEED CONSULTING:
THE EPSTEN GROUP, INC.
303 FERGUSON STREET
ATLANTA, GA 30307

VERTICAL TRANSPORTATION:
VAN DEUSEN ASSOCIATES
5 REGENT STREET, SUITE 524
LIVINGSTON, NJ 07039

COST ESTIMATING:
CONSTRUCTION COST SYSTEMS
200 WEST 22ND STREET, SUITE 209
LOMBARD, IL 60148

SIGNAGE:
TWO TWELVE ASSOCIATES, INC.
902 BROADWAY, 20TH FLOOR
NEW YORK, NY 10010

CERTIFICATIONS

KEY PLAN

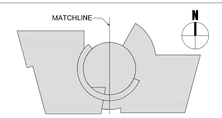

REVISION NOTES

MARK	DATE	DESCRIPTION
1	8/16/2007	VE CHANGES

GRAPHIC SCALE

CONTRACTORS

A/E CON. NO.	
A/E TASK NO.	
CONS. CONTR.	
CONS. WORK	
PRIME A/E	
SUB A/E	
CONSTR. CON.	

BUILDING

NAME	UNITED STATES FEDERAL COURTHOUSE
STREET	COURT STREET
CITY/ST./ZIP	JACKSON, MS 39401
BUILDING NO.	-
OTHER	-
BUILDING NOs.	
FACILITY CODE	-

PROJECT

PROJECT TITLE	NEW UNITED STATES FEDERAL COURTHOUSE JACKSON, MS
PROJECT DESCRIPTION	COURTHOUSE
PROJECT NO.	MS 00149
GSA PM	LAURA SHADIX
SUBMISSION	100% CONSTRUCTION DOC
SUB. DATE	10 September 2007

DRAWING

DRAWING TITLE	TYPICAL ROOF DETAILS 2
FILE NAME	A-539.dwg
FLOOR NO.	
DRAWN BY	PH
DATE DRAFTED:	
CHECKED BY	-
SHEET SIZE:	914 X 1219
DRAWING NO.	**A 539**
DISCIPLINE / SHEET TYPE / SEQUENCE	
SHEET	OF

K:\Jackson Courthouse\ADS design\AIA.05 CD\05\99\99-DWG\A-539-roof det2.dwg, 9/5/2007 12:45:30 PM