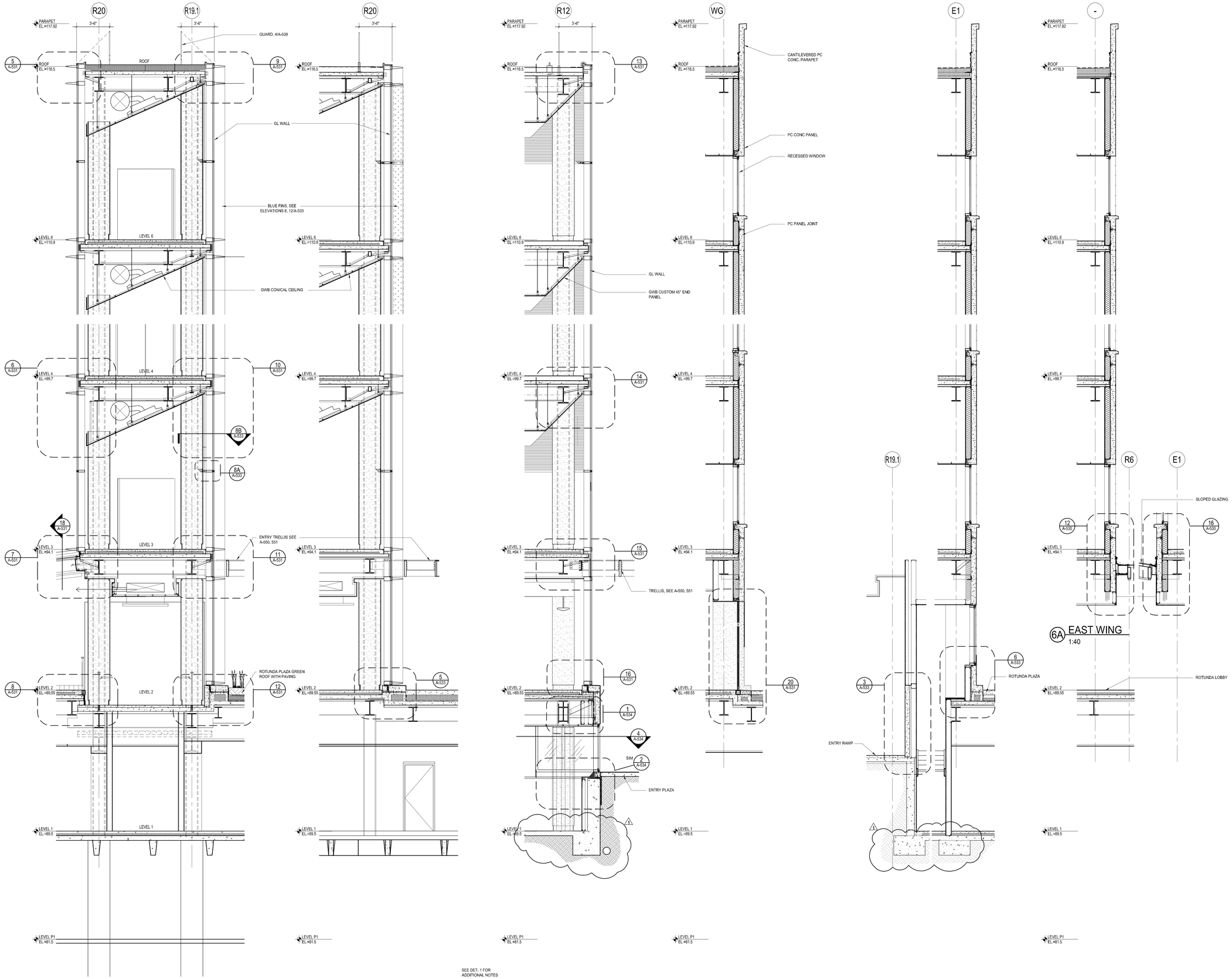

1 ROTUNDA BRIDGE SECTION AT SOUTH GLASS WALLS
1:40

2 ROTUNDA WALL SECTION AT WEST GLASS WALLS
1:40

3 ROTUNDA WALL SECTION AT WEST GL WALL NOSE
1:40

4 ROTUNDA WALL SECTION AT ROTUNDA DOORS
1:40

5 ROTUNDA WALL SECTION AT EAST WING
1:40

6A EAST WING
1:40

6 E AND W WING WALL SECTIONS AT SLOPED GLAZING
1:40

PROPERTY OF THE UNITED STATES GOVERNMENT - FOR OFFICIAL USE ONLY. Do not remove this notice. Properly destroy documents when no longer needed.

GENERAL SERVICES ADMINISTRATION

UNITED STATES COURTHOUSE

JACKSON, MISSISSIPPI

ARCHITECT:
H3 HARDY COLLABORATION ARCHITECTURE
www.h3hc.com
902 BROADWAY, 19TH FLOOR
NEW YORK, NEW YORK 10010

LOCAL ARCHITECT:
DALE AND ASSOCIATES ARCHITECTS, P.A.
ONE JACKSON PLACE, SUITE 250
188 E. CAPITOL STREET
JACKSON, MS 39201

STRUCTURAL ENGINEER:
WALTER P. MOORE
1845 WOODALL RODGERS FRWY., SUITE 1650
DALLAS, TX 75201-2287

MECHANICAL/PLUMBING ENGINEER:
COOKE DOUGLASS FARR LEMONS
3780 I-55 NORTH, STE 101
JACKSON, MS 39211

ELECTRICAL ENGINEER:
WATKINS O'GWYNN
4523 OFFICE PARK DRIVE
JACKSON, MS 39206

CIVIL ENGINEER:
SPENCER-ENGINEERS, INC.
P.O. BOX 4328
JACKSON, MS 39296

LIGHTING:
FISHER MARANTZ STONE
22 WEST 19TH STREET
NEW YORK, NY 10011

ACOUSTICS:
POLYSONICS
5115 MACARTHUR BLVD, NW
WASHINGTON, D.C. 20016

BLAST ENGINEERING:
HINMAN CONSULTING ENGINEERS
350 FIFTH AVENUE, SUITE 4715
NEW YORK, NY 10118

FIRE AND LIFE SAFETY:
ROLF JENSEN & ASSOCIATES
13831 NORTHWEST FREEWAY, SUITE 330
HOUSTON, TX 77040

SECURITY:
SYSTECH GROUP INC.
11260 ROGER BACON DRIVE, SUITE 501
RESTON, VA 20190

COURTS SECURITY:
TYCO FIRE & SECURITY ADT
3601 EISENHOWER AVENUE, THIRD FLOOR
ALEXANDRIA , VA 22304

COURTS TECHNOLOGY:
ELECTRONICS INTERIORS, INC.
1310 SIBLEY MEMORIAL HIGHWAY
MENDOTA, MN 55150

LEED CONSULTING:
THE EPSTEN GROUP, INC.
303 FERGUSON STREET
ATLANTA, GA 30307

VERTICAL TRANSPORTATION:
VAN DEUSEN ASSOCIATES
5 REGENT STREET, SUITE 524
LIVINGSTON, NJ 07039

COST ESTIMATING:
CONSTRUCTION COST SYSTEMS
200 WEST 22ND STREET, SUITE 209
LOMBARD, IL 60148

SIGNAGE:
TWO TWELVE ASSOCIATES, INC.
902 BROADWAY, 20TH FLOOR
NEW YORK, NY 10010

CERTIFICATIONS

KEY PLAN

MATCHLINE

N

REVISION NOTES

MARK	DATE	DESCRIPTION
1	8/16/2007	VE CHANGES

GRAPHIC SCALE

CONTRACTORS

A/E CON. NO.	
A/E TASK NO.	
CONS. CONTR.	
CONS. WORK	
PRIME A/E	
SUB A/E	
CONSTR. CON.	

BUILDING

NAME	UNITED STATES FEDERAL COURTHOUSE
STREET	COURT STREET
CITY/ST./ZIP	JACKSON, MS 39401
BUILDING NO.	-
OTHER BUILDING NOs.	-
FACILITY CODE	-

PROJECT

PROJECT TITLE	NEW UNITED STATES FEDERAL COURTHOUSE JACKSON, MS
PROJECT DESCRIPTION	COURTHOUSE
PROJECT NO.	MS 00149
GSA PM	LAURA SHADIX
SUBMISSION	100% CONSTRUCTION DOC
SUB. DATE	10 September 2007

DRAWING

DRAWING TITLE	ROTUNDA WALL SECTIONS		
FILE NAME	A-511.dwg		
FLOOR NO.			
DRAWN BY	PH	DATE DRAFTED:	04/19/06
CHECKED BY	-	SHEET SIZE:	914 X 1219

DRAWING NO. **A 516**

DISCIPLINE	SHEET TYPE	SEQUENCE
SHEET		OF

K:\JacksonCourthouse\ADS design\VA3.5X CD\00899-DWG\9-A 516-walls ns.dwg, 9/3/2007 10:47:41 AM

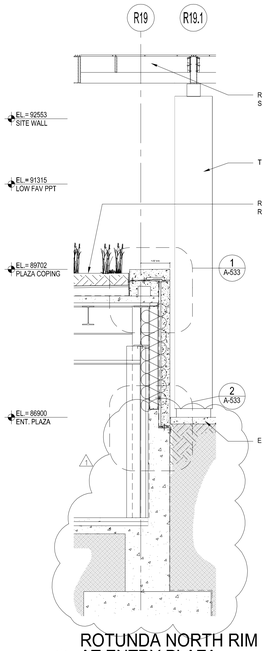

1 ROTUNDA NORTH RIM AT ENTRY PLAZA
1:40

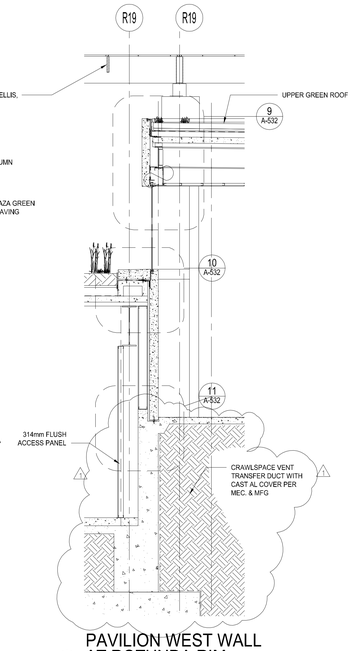

2 PAVILION WEST WALL AT ROTUNDA RIM
1:40

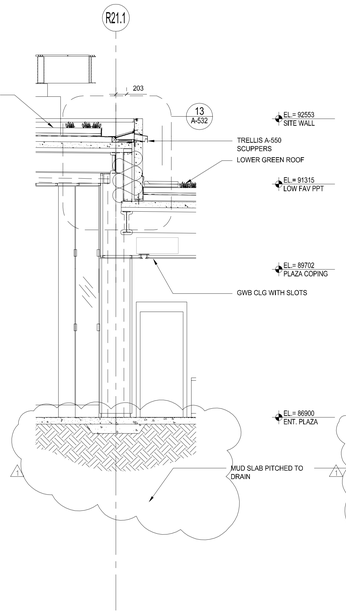

3 PAVILION ROOF AT ROOF STEP
1:40

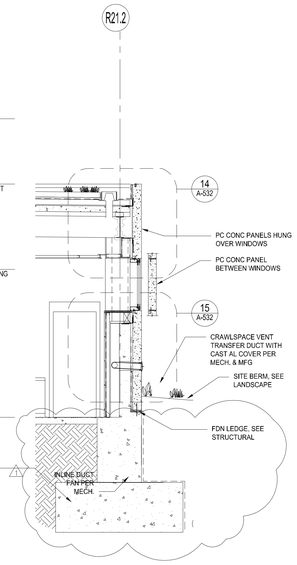

4 PAVILION WALL AT NORTH
1:40

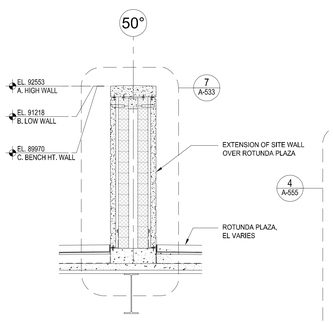

5 LONG WALL SECTION AT ROTUNDA
1:40

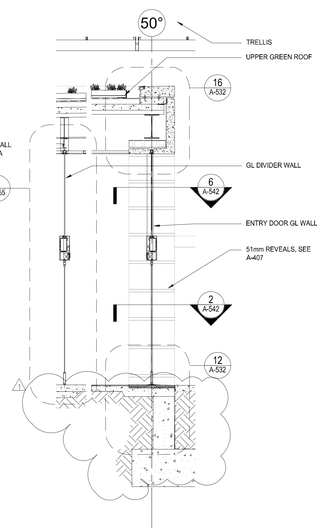

6 LONG WALL CROSS SECTION AT MAIN ENTRY
1:40

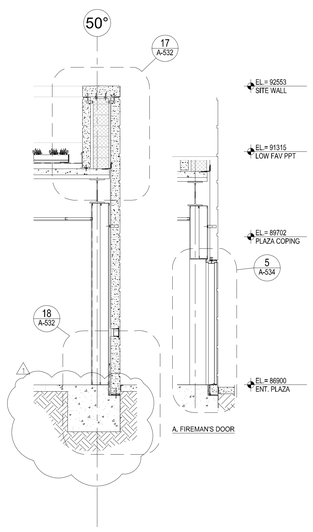

7 LONG WALL SECTION AT PAVILION OFFICES
1:40

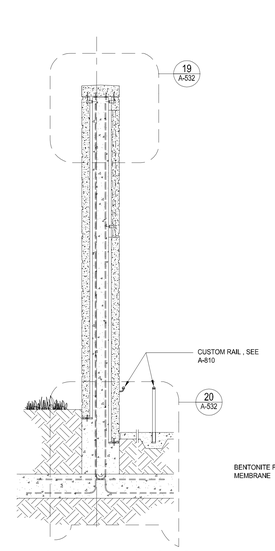

8 LONG WALL SECTION AT RAMP
1:40

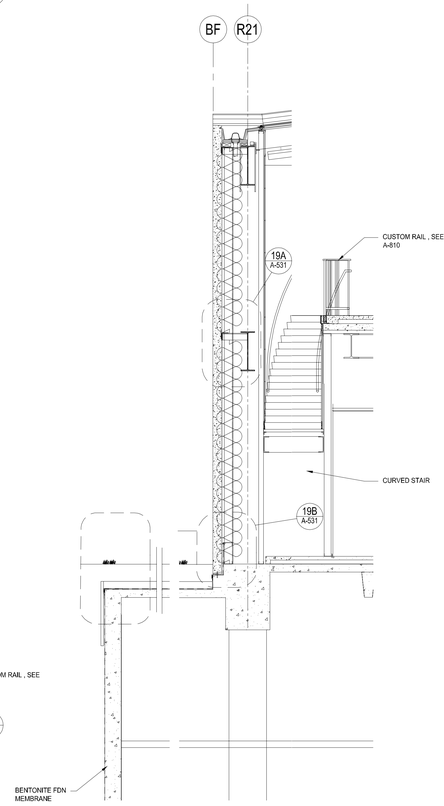

9 ROTUNDA SOUTH WALL AT GREENHOUSE
1:40

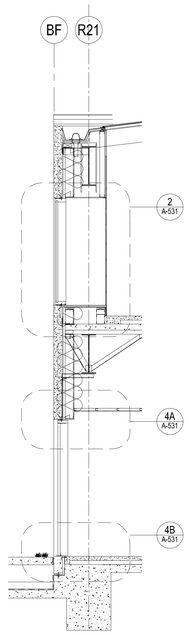

10 SOUTH ROTUNDA OPENINGS AT UPPER LANDING
1:40

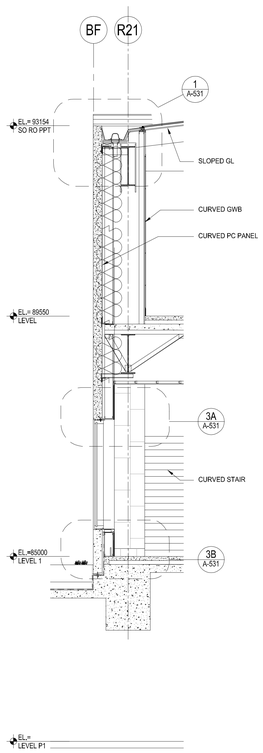

11 SOUTH ROTUNDA OPENING AT LOWER LANDING
1:40

PROPERTY OF THE UNITED STATES GOVERNMENT - FOR OFFICIAL USE ONLY. Do not remove this notice. Properly destroy documents when no longer needed.

GENERAL SERVICES ADMINISTRATION

UNITED STATES COURTHOUSE
JACKSON, MISSISSIPPI

ARCHITECT:
H3 HARDY COLLABORATION ARCHITECTURE
www.h3hc.com
902 BROADWAY, 19TH FLOOR
NEW YORK, NEW YORK 10010

LOCAL ARCHITECT:
DALE AND ASSOCIATES ARCHITECTS, P.A.
ONE JACKSON PLACE, SUITE 250
188 E. CAPITOL STREET
JACKSON, MS 39201

STRUCTURAL ENGINEER:
WALTER P. MOORE
1845 WOODALL RODGERS FRWY., SUITE 1650
DALLAS, TX 75201-2287

MECHANICAL/PLUMBING ENGINEER:
COOKE DOUGLASS FARR LEMONS
3780 I-55 NORTH, STE 101
JACKSON, MS 39211

ELECTRICAL ENGINEER:
WATKINS O'GWYNN
4523 OFFICE PARK DRIVE
JACKSON, MS 39206

CIVIL ENGINEER:
SPENCER-ENGINEERS, INC.
P.O. BOX 4328
JACKSON, MS 39296

LIGHTING:
FISHER MARANTZ STONE
22 WEST 19TH STREET
NEW YORK, NY 10011

ACOUSTICS:
POLYSONICS
5115 MACARTHUR BLVD, NW
WASHINGTON, D.C. 20016

BLAST ENGINEERING:
HINMAN CONSULTING ENGINEERS
350 FIFTH AVENUE, SUITE 4715
NEW YORK, NY 10118

FIRE AND LIFE SAFETY:
ROLF JENSEN & ASSOCIATES
13831 NORTHWEST FREEWAY, SUITE 330
HOUSTON, TX 77040

SECURITY:
SYSTECH GROUP INC.
11260 ROGER BACON DRIVE, SUITE 501
RESTON, VA 20190

COURTS SECURITY:
TYCO FIRE & SECURITY ADT
3601 EISENHOWER AVENUE, THIRD FLOOR
ALEXANDRIA , VA 22304

COURTS TECHNOLOGY:
ELECTRONICS INTERIORS, INC.
1310 SIBLEY MEMORIAL HIGHWAY
MENDOTA, MN 55150

LEED CONSULTING:
THE EPSTEN GROUP, INC.
303 FERGUSON STREET
ATLANTA, GA 30307

VERTICAL TRANSPORTATION:
VAN DEUSEN ASSOCIATES
5 REGENT STREET, SUITE 524
LIVINGSTON, NJ 07039

COST ESTIMATING:
CONSTRUCTION COST SYSTEMS
200 WEST 22ND STREET, SUITE 209
LOMBARD, IL 60148

SIGNAGE:
TWO TWELVE ASSOCIATES, INC.
902 BROADWAY, 20TH FLOOR
NEW YORK, NY 10010

CERTIFICATIONS

KEY PLAN

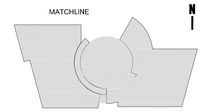

REVISION NOTES

MARK	DATE	DESCRIPTION
1	8/16/2007	VE CHANGES

GRAPHIC SCALE

CONTRACTORS

A/E CON. NO.	
A/E TASK NO.	
CONS. CONTR.	
CONS. WORK	
PRIME A/E	
SUB A/E	
CONSTR. CON.	

BUILDING

NAME	UNITED STATES FEDERAL COURTHOUSE
STREET	COURT STREET
CITY/ST./ZIP	JACKSON, MS 39401
BUILDING NO.	-
OTHER BUILDING NOs.	-
FACILITY CODE	-

PROJECT

PROJECT TITLE	NEW UNITED STATES FEDERAL COURTHOUSE JACKSON, MS
PROJECT DESCRIPTION	COURTHOUSE
PROJECT NO.	MS 00149
GSA PM	LAURA SHADIX
SUBMISSION	100% CONSTRUCTION DOC
SUB. DATE	10 September 2007

DRAWING

DRAWING TITLE	ENTRY PAVILION WALL SECTIONS		
FILE NAME	A-517.dwg		
FLOOR NO.			
DRAWN BY	PH	DATE DRAFTED:	04/19/06
CHECKED BY	-	SHEET SIZE:	914 X 1219
DRAWING NO.	A 517 (DISCIPLINE / SHEET TYPE / SEQUENCE)		
	SHEET	OF	

K:\Jackson\Courthouse\AS\ design\VUS.05 CN\05899-SW\05A-S1\1-ents-rs2.dwg, 9/5/2007 10:30:20 AM

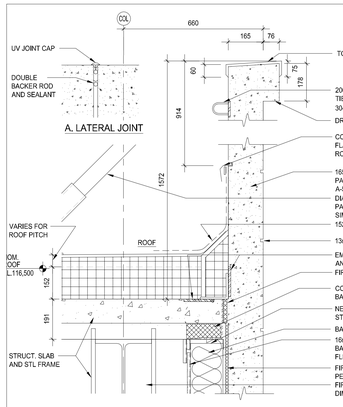

1 TYPICAL PARAPET WALL DETAIL
1:10

NOTE: FOR TYP. DRIPS AND EDGES, SEE 12/A-534

PANEL SUPPORTS TO BE AS ENGINEERED AND SUBMITTED BY THE FABRICATOR TO SUPPORT THE PANELS, WINDOWS, SUN-SCREENS, TRELLIS, AND OTHER APPLIED LOADS, TYP.

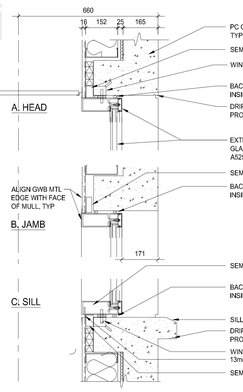

2 TYPICAL WINDOW OPENING WALL DETAIL
1:10

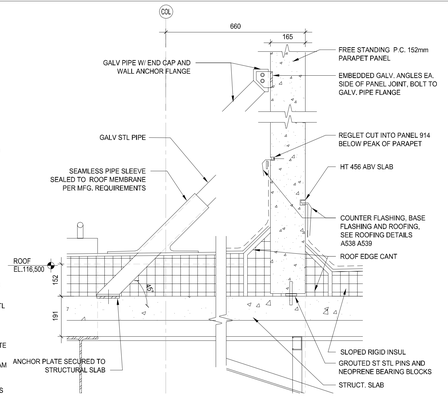

5 PARAPET ABOVE BAY WINDOW WALL DETAIL
1:10

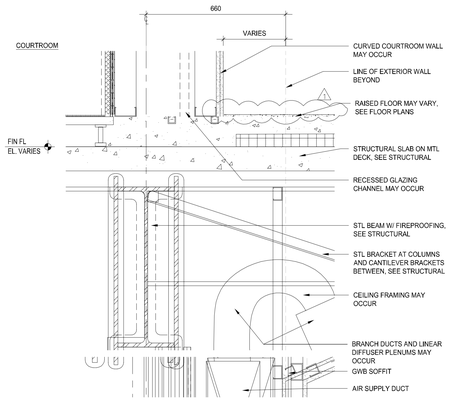

6 EXTERIOR WALL LINE AT BAY WINDOW WALL DETAIL
1:10

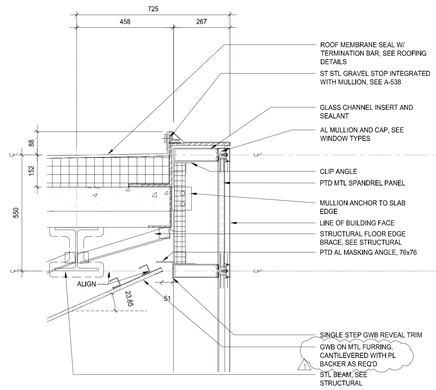

9 ROOF EDGE AT BAY WINDOW FRONT WALL DETAIL
1:10

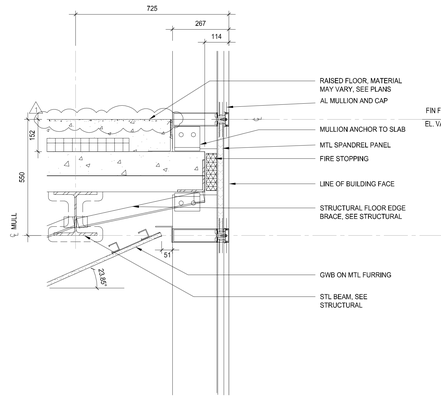

10 TYPICAL FLOOR EDGE AT BAY WINDOW FRONT WALL DETAIL
1:10

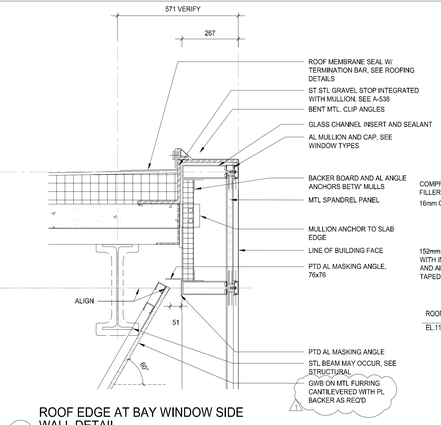

13 ROOF EDGE AT BAY WINDOW SIDE WALL DETAIL
1:10

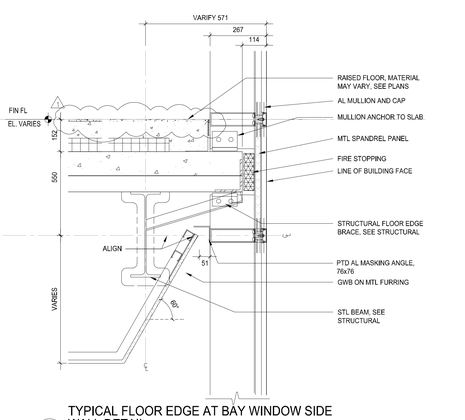

14 TYPICAL FLOOR EDGE AT BAY WINDOW SIDE WALL DETAIL
1:10

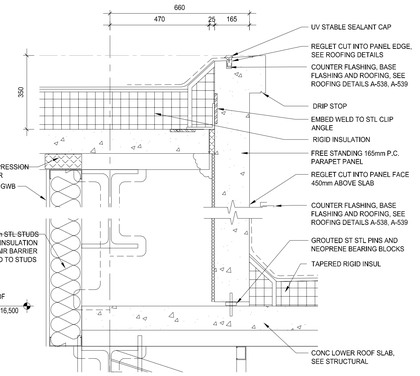

17 PARAPET ABOVE SPECIAL PROCEEDINGS BAY WINDOW WALL DETAIL
1:10

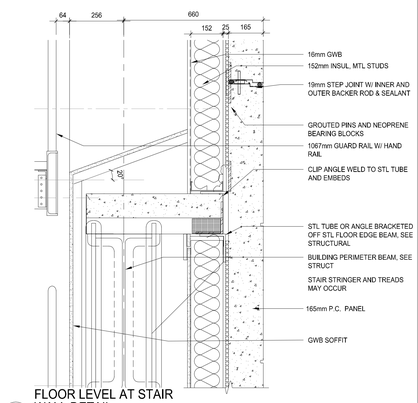

18 FLOOR LEVEL AT STAIR WALL DETAIL
1:10

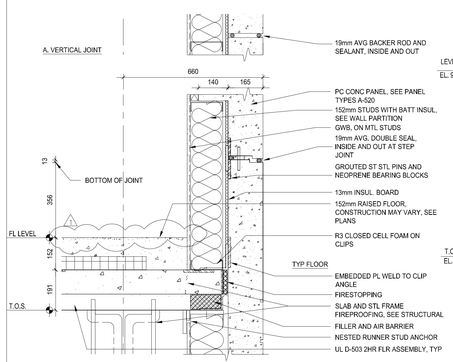

3 TYPICAL FLOOR EDGE WALL DETAIL
1:10

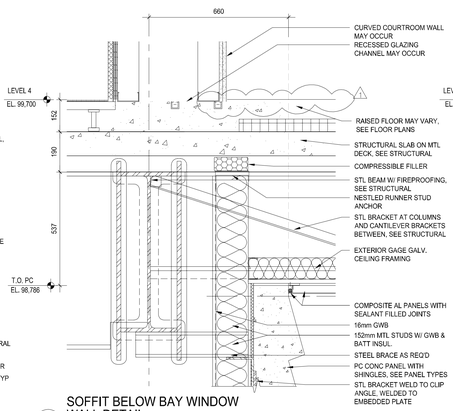

7 SOFFIT BELOW BAY WINDOW WALL DETAIL
1:10

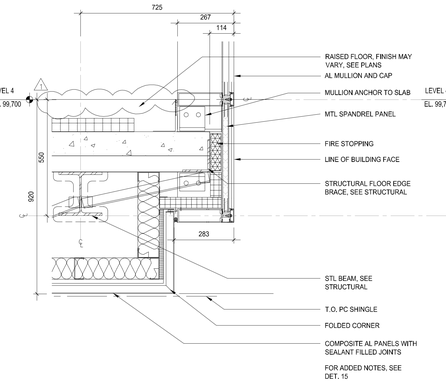

11 4TH FLOOR EDGE AT BAY WINDOW FRONT WALL DETAIL
1:10

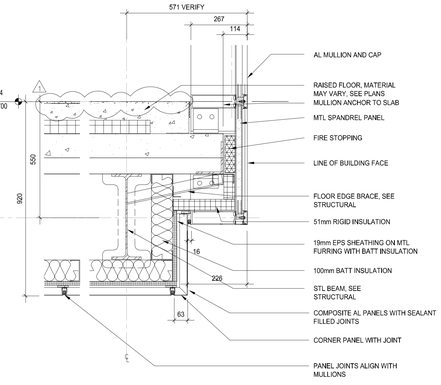

15 4TH FLOOR EDGE AT BAY WINDOW SIDE WALL DETAIL
1:10

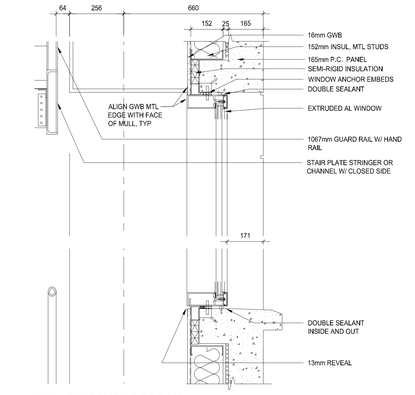

19 WINDOW LEVEL AT STAIR WALL DETAIL
1:10

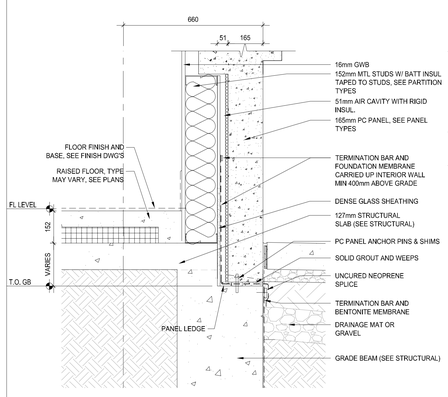

4 TYPICAL FOUNDATION LEDGE AT GRADE WALL DETAIL
1:10

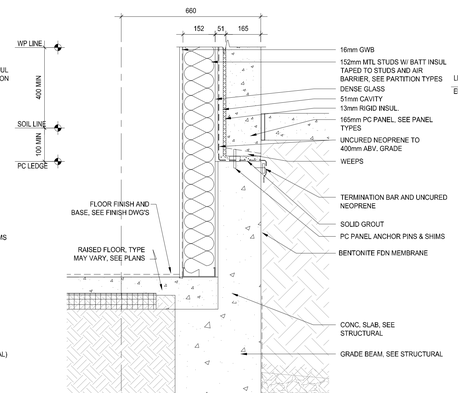

8 TYPICAL HIGH FOUNDATION LEDGE WALL DETAIL
1:10

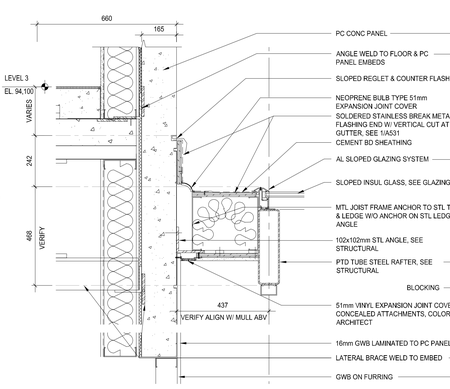

12 WEST EDGE SLOPED GLAZING WALL DETAIL
1:10

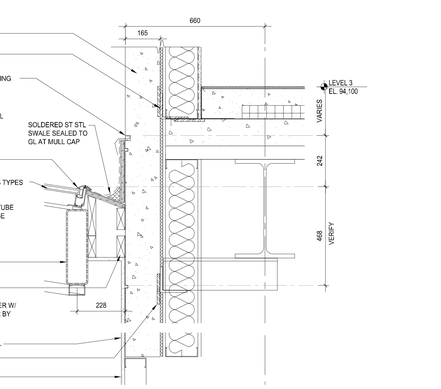

16 EAST EDGE OF SLOPED GLAZING WALL DETAIL
1:10

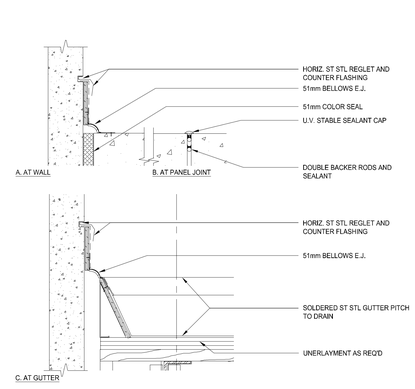

20 51mm EJ'S AT W END OF SO ROTUNDA WALL WALL DETAIL
1:10

NOTE: FOR TYP P.C. WALL NOTES SEE DET. 1 & 4

PROPERTY OF THE UNITED STATES GOVERNMENT - FOR OFFICIAL USE ONLY. Do not remove this notice. Properly destroy documents when no longer needed.

GENERAL SERVICES ADMINISTRATION

UNITED STATES COURTHOUSE
JACKSON, MISSISSIPPI

ARCHITECT:
H3 HARDY COLLABORATION ARCHITECTURE
www.h3hc.com
902 BROADWAY, 19TH FLOOR
NEW YORK, NEW YORK 10010

LOCAL ARCHITECT:
DALE AND ASSOCIATES ARCHITECTS, P.A.
ONE JACKSON PLACE, SUITE 250
188 E. CAPITOL STREET
JACKSON, MS 39201

STRUCTURAL ENGINEER:
WALTER P. MOORE
1845 WOODALL RODGERS FRWY., SUITE 1650
DALLAS, TX 75201-2287

MECHANICAL/PLUMBING ENGINEER:
COOKE DOUGLASS FARR LEMONS
3780 I-55 NORTH, STE 101
JACKSON, MS 39211

ELECTRICAL ENGINEER:
WATKINS O'GWYNN
4523 OFFICE PARK DRIVE
JACKSON, MS 39206

CIVIL ENGINEER:
SPENCER-ENGINEERS, INC.
P.O. BOX 4328
JACKSON, MS 39296

LIGHTING:
FISHER MARANTZ STONE
22 WEST 19TH STREET
NEW YORK, NY 10011

ACOUSTICS:
POLYSONICS
5115 MACARTHUR BLVD, NW
WASHINGTON, D.C. 20016

BLAST ENGINEERING:
HINMAN CONSULTING ENGINEERS
350 FIFTH AVENUE, SUITE 4715
NEW YORK, NY 10118

FIRE AND LIFE SAFETY:
ROLF JENSEN & ASSOCIATES
13831 NORTHWEST FREEWAY, SUITE 330
HOUSTON, TX 77040

SECURITY:
SYSTECH GROUP INC.
11260 ROGER BACON DRIVE, SUITE 501
RESTON, VA 20190

COURTS SECURITY:
TYCO FIRE & SECURITY ADT
3601 EISENHOWER AVENUE, THIRD FLOOR
ALEXANDRIA , VA 22304

COURTS TECHNOLOGY:
ELECTRONICS INTERIORS, INC.
1310 SIBLEY MEMORIAL HIGHWAY
MENDOTA, MN 55150

LEED CONSULTING:
THE EPSTEN GROUP, INC.
303 FERGUSON STREET
ATLANTA, GA 30307

VERTICAL TRANSPORTATION:
VAN DEUSEN ASSOCIATES
5 REGENT STREET, SUITE 524
LIVINGSTON, NJ 07039

COST ESTIMATING:
CONSTRUCTION COST SYSTEMS
200 WEST 22ND STREET, SUITE 209
LOMBARD, IL 60148

SIGNAGE:
TWO TWELVE ASSOCIATES, INC.
902 BROADWAY, 20TH FLOOR
NEW YORK, NY 10010

CERTIFICATIONS

KEY PLAN

MATCHLINE

N

REVISION NOTES		
MARK	DATE	DESCRIPTION
1	8/16/2007	VE CHANGES

GRAPHIC SCALE

NOTE: ALL COMPONENTS OF THE BUILDING EXTERIOR SKIN AND EXTERIOR ATTACHMENTS SHALL BE ENGINEERED BY THE FABRICATOR. COORDINATE ALL LOADS WITH THE ENGINEER FOR SUPPORTING AND SUPPORTED STRUCTURES. METAL ATTACHMENTS, PTD FINISH KYNAR, COLOR BY ARCHITECT. PROVIDE STRUCTURAL DESIGN FOR SYSTEM AND ALL PARTS TO NOT DETACH DUE TO BLAST.

CONTRACTORS	
A/E CON. NO.	
A/E TASK NO.	
CONS. CONTR.	
CONS. WORK	
PRIME A/E	
SUB A/E	
CONSTR. CON.	

BUILDING	
NAME	UNITED STATES FEDERAL COURTHOUSE
STREET	COURT STREET
CITY/ST./ZIP	JACKSON, MS 39401
BUILDING NO.	-
OTHER	-
BUILDING NOs.	
FACILITY CODE	-

PROJECT	
PROJECT TITLE	NEW UNITED STATES FEDERAL COURTHOUSE JACKSON, MS
PROJECT DESCRIPTION	COURTHOUSE
PROJECT NO.	MS 00149
GSA PM	LAURA SHADIX
SUBMISSION	100% CONSTRUCTION DOC
SUB. DATE	10 September 2007
DRAWING TITLE	WALL SECTION DETAILS
FILE NAME	9-A-530.dwg
FLOOR NO.	

DRAWING		
DRAWN BY	PH	DATE DRAFTED:
CHECKED BY	-	SHEET SIZE: 914 X 1219
DRAWING NO.	DISCIPLINE	SHEET TYPE / SEQUENCE
	A	530
	SHEET	OF

K:\Jackson\Courthouse\400 design\A\A.05 C\h3\00499-DWG\9-A 530-wall det.dwg, 9/5/2007 10:55:51 AM

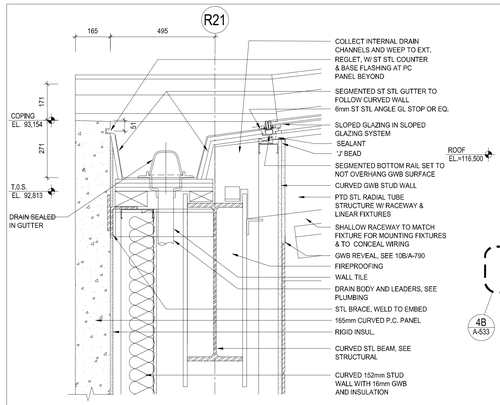

1 SOUTH ROTUNDA WALL AT SLOPED GLASS WALL DETAIL
1:10

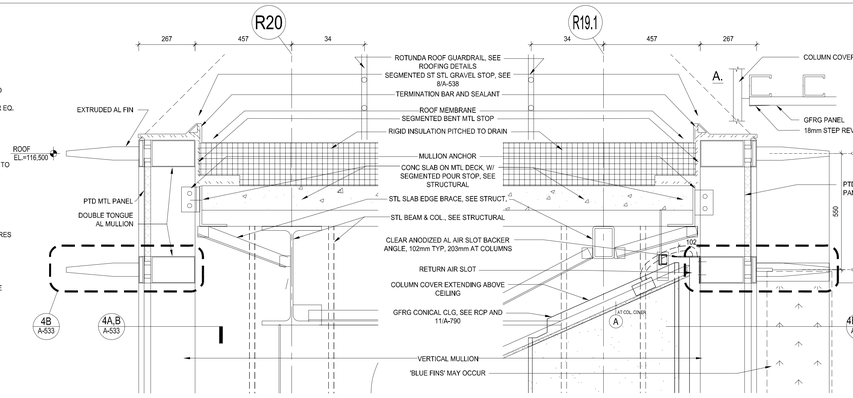

5 OUTER ROTUNDA CURTAIN WALL AT ROOF WALL DETAIL
1:10

9 INNER ROTUNDA CURTAIN WALL AT ROOF WALL DETAIL
1:10

SEE ADDITIONAL NOTES, DETAIL 5

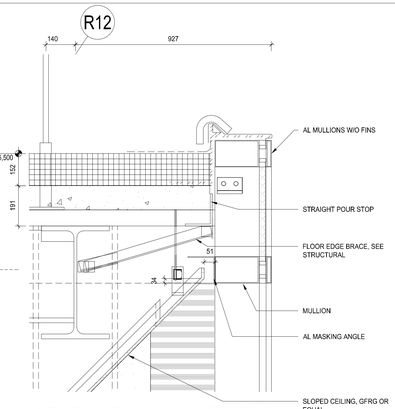

13 ROTUNDA CURTAIN WALL NOSE AT ROOF WALL DETAIL
1:10

SEE ADDITIONAL NOTES, DETAIL 5

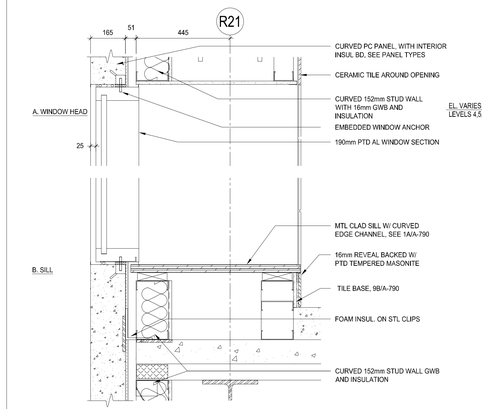

2 SOUTH ROTUNDA L2 LOBBY WINDOW WALL DETAIL
1:10

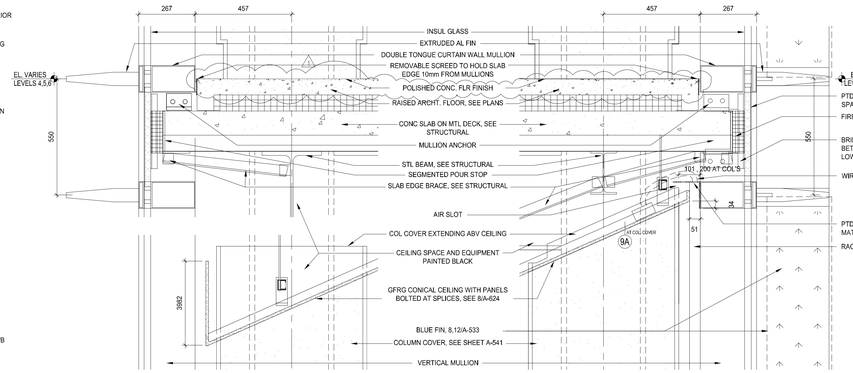

6 OUTER ROTUNDA CURTAIN WALL AT TYP FLOOR WALL DETAIL
1:10

10 INNER ROTUNDA CURTAIN WALL AT TYP FLOOR WALL DETAIL
1:10

SEE ADDITIONAL NOTES, DETAIL 6 & 9

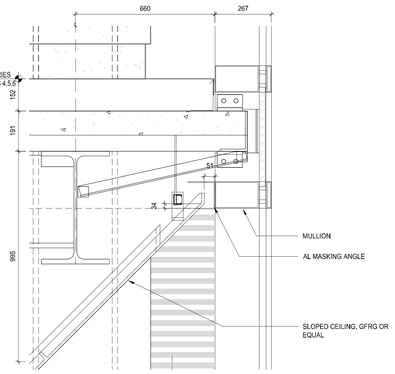

14 ROTUNDA CURTAIN WALL NOSE AT TYP FLR WALL DETAIL
1:10

SEE ADDITIONAL NOTES, DETAIL 6 & 13

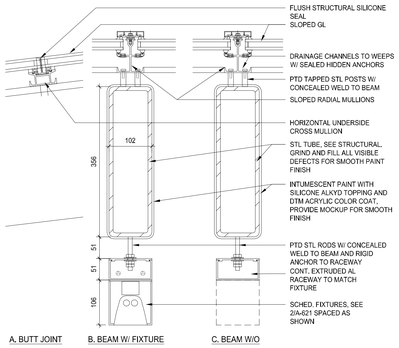

18 BEAM AND LIGHTING MOUNT AT SLOPED GLASS SECTION DETAIL
1:5

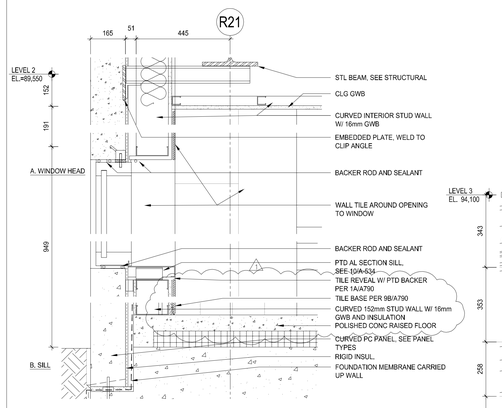

3 SOUTH ROTUNDA L1 LOBBY WINDOW WALL DETAIL
1:10

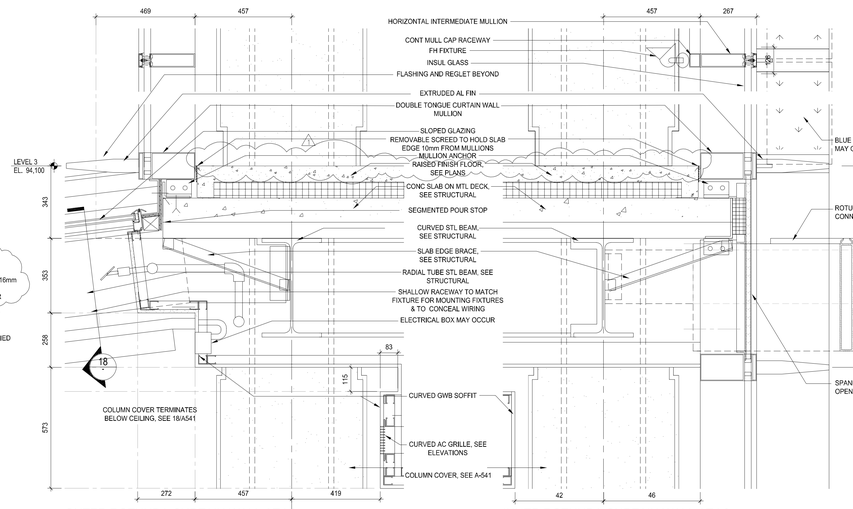

7 OUTER ROTUNDA CURTAIN WALL AT L3 WALL DETAIL
1:10

11 INNER ROTUNDA CURTAIN WALL AT L3 WALL DETAIL
1:10

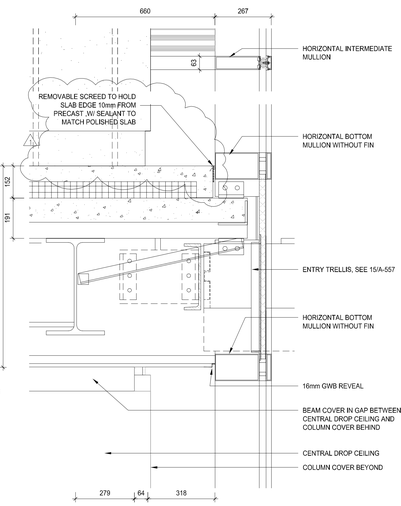

15 ROTUNDA CURTAIN WALL NOSE AT L3 WALL DETAIL
1:10

SEE ADDITIONAL NOTES, DETAIL 7 & 11

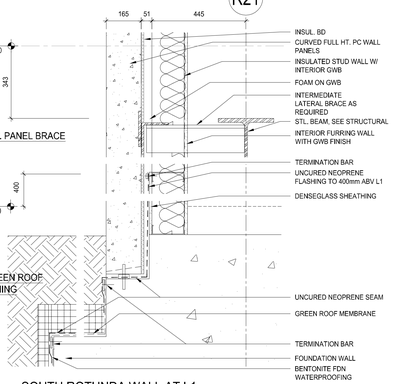

19 SOUTH ROTUNDA WALL AT L1 WALL DETAIL
1:10

SEE ADDITIONAL NOTES, DETAIL 4

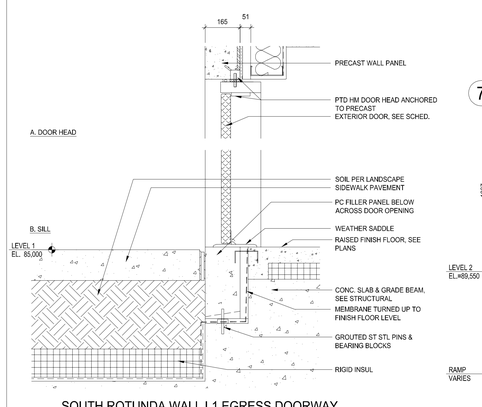

4 SOUTH ROTUNDA WALL L1 EGRESS DOORWAY WALL DETAIL
1:10

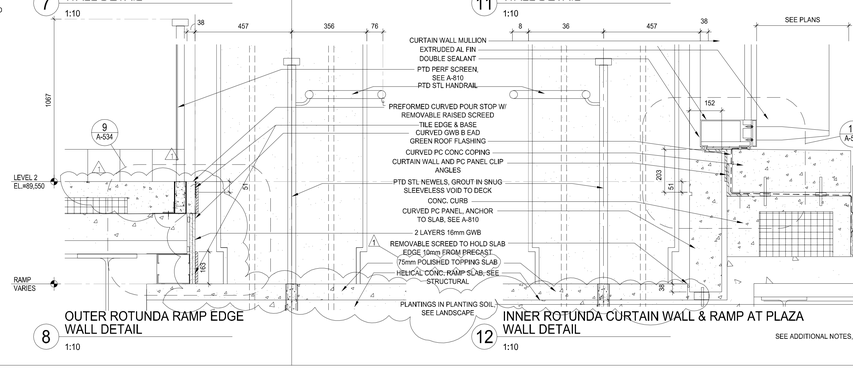

8 OUTER ROTUNDA RAMP EDGE WALL DETAIL
1:10

12 INNER ROTUNDA CURTAIN WALL & RAMP AT PLAZA WALL DETAIL
1:10

SEE ADDITIONAL NOTES, DETAIL 8

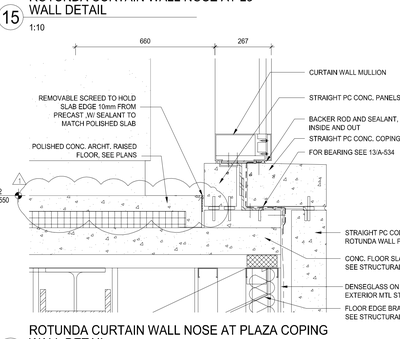

16 ROTUNDA CURTAIN WALL NOSE AT PLAZA COPING WALL DETAIL
1:10

SEE ADDITIONAL NOTES, DETAIL 12
SEE ALSO 1/A-534

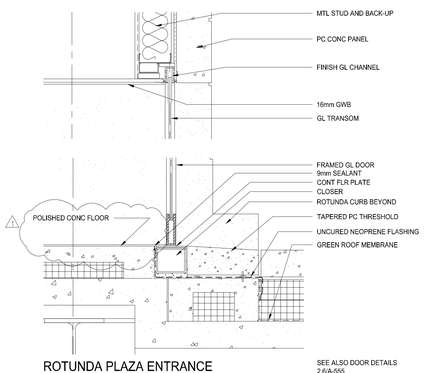

20 ROTUNDA PLAZA ENTRANCE WALL DETAIL
1:10

SEE ALSO DOOR DETAILS 2,6/A-555

PROPERTY OF THE UNITED STATES GOVERNMENT - FOR OFFICIAL USE ONLY. Do not remove this notice. Properly destroy documents when no longer needed.

GENERAL SERVICES ADMINISTRATION

UNITED STATES COURTHOUSE
JACKSON, MISSISSIPPI

ARCHITECT:
H3 HARDY COLLABORATION ARCHITECTURE
www.h3hc.com
902 BROADWAY, 19TH FLOOR
NEW YORK, NEW YORK 10010

LOCAL ARCHITECT:
DALE AND ASSOCIATES ARCHITECTS, P.A.
ONE JACKSON PLACE, SUITE 250
188 E. CAPITOL STREET
JACKSON, MS 39201

STRUCTURAL ENGINEER:
WALTER P. MOORE
1845 WOODALL RODGERS FRWY., SUITE 1650
DALLAS, TX 75201-2287

MECHANICAL/PLUMBING ENGINEER:
COOKE DOUGLASS FARR LEMONS
3780 I-55 NORTH, STE 101
JACKSON, MS 39211

ELECTRICAL ENGINEER:
WATKINS O'GWYNN
4523 OFFICE PARK DRIVE
JACKSON, MS 39206

CIVIL ENGINEER:
SPENCER-ENGINEERS, INC.
P.O. BOX 4328
JACKSON, MS 39296

LIGHTING:
FISHER MARANTZ STONE
22 WEST 19TH STREET
NEW YORK, NY 10011

ACOUSTICS:
POLYSONICS
5115 MACARTHUR BLVD, NW
WASHINGTON, D.C. 20016

BLAST ENGINEERING:
HINMAN CONSULTING ENGINEERS
350 FIFTH AVENUE, SUITE 4715
NEW YORK, NY 10118

FIRE AND LIFE SAFETY:
ROLF JENSEN & ASSOCIATES
13831 NORTHWEST FREEWAY, SUITE 330
HOUSTON, TX 77040

SECURITY:
SYSTECH GROUP INC.
11260 ROGER BACON DRIVE, SUITE 501
RESTON, VA 20190

COURTS SECURITY:
TYCO FIRE & SECURITY ADT
3601 EISENHOWER AVENUE, THIRD FLOOR
ALEXANDRIA , VA 22304

COURTS TECHNOLOGY:
ELECTRONICS INTERIORS, INC.
1310 SIBLEY MEMORIAL HIGHWAY
MENDOTA, MN 55150

LEED CONSULTING:
THE EPSTEN GROUP, INC.
303 FERGUSON STREET
ATLANTA, GA 30307

VERTICAL TRANSPORTATION:
VAN DEUSEN ASSOCIATES
5 REGENT STREET, SUITE 524
LIVINGSTON, NJ 07039

COST ESTIMATING:
CONSTRUCTION COST SYSTEMS
200 WEST 22ND STREET, SUITE 209
LOMBARD, IL 60148

SIGNAGE:
TWO TWELVE ASSOCIATES, INC.
902 BROADWAY, 20TH FLOOR
NEW YORK, NY 10010

CERTIFICATIONS

KEY PLAN

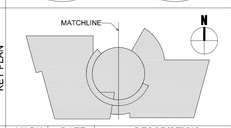

REVISION NOTES

MARK	DATE	DESCRIPTION
1	8/16/2007	VE CHANGES

GRAPHIC SCALE

CONTRACTORS

A/E CON. NO.	
A/E TASK NO.	
CONS. CONTR.	
CONS. WORK	
PRIME A/E	
SUB A/E	
CONSTR. CON.	

BUILDING

NAME	UNITED STATES FEDERAL COURTHOUSE
STREET	COURT STREET
CITY/ST./ZIP	JACKSON, MS 39401
BUILDING NO.	-
OTHER	-
BUILDING NOs.	
FACILITY CODE	-

PROJECT

PROJECT TITLE	NEW UNITED STATES FEDERAL COURTHOUSE JACKSON, MS
PROJECT DESCRIPTION	COURTHOUSE
PROJECT NO.	MS 00149
GSA PM	LAURA SHADIX
SUBMISSION	100% CONSTRUCTION DOC
SUB. DATE	10 September 2007

DRAWING

DRAWING TITLE	WALL SECTION DETAILS
FILE NAME	A-531.dwg
FLOOR NO.	
DRAWN BY	PH
DATE DRAFTED:	04/19/06
CHECKED BY	-
SHEET SIZE:	914 X 1219
DRAWING NO.	A 531
DISCIPLINE / SHEET TYPE / SEQUENCE	
SHEET	OF

K:\Jackson Courthouse\ADD design\ADLGS_EDB2006\Wk\SWG\A-531-wall det2.dwg, 9/5/2007 11:52:24 AM

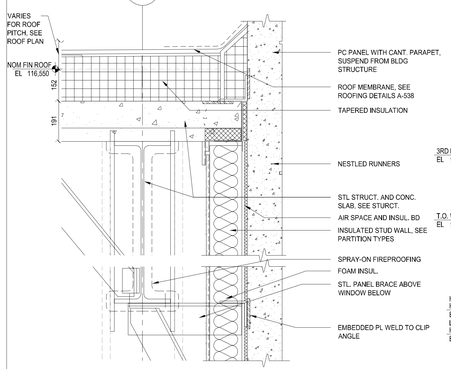

1 ROOF EDGE AT CORNER WINDOW WALL DETAIL
1:10

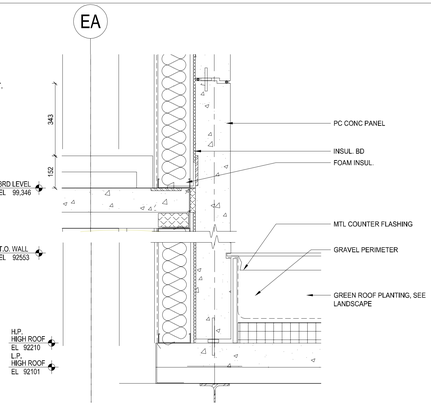

5 EAST WING WALL AT HIGH PAVILION ROOF WALL DETAIL
1:10

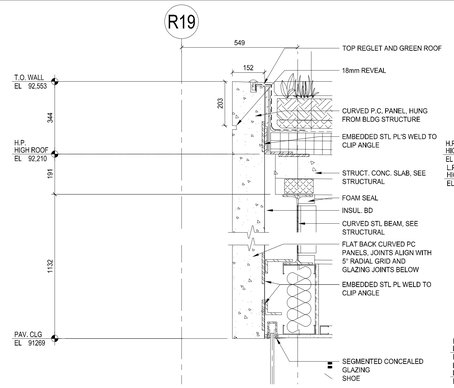

9 PAVILION FASCIA AT ROTUNDA EDGE WALL DETAIL
1:10

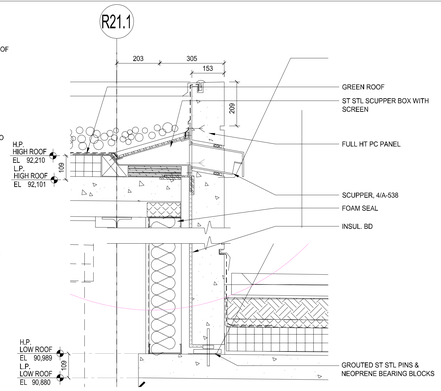

13 PAVILION FASCIA AT ROOF STEP WALL DETAIL
1:10

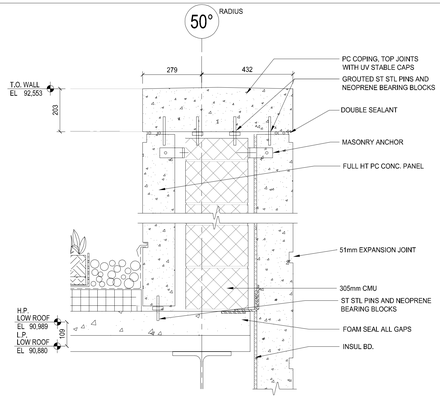

17 LONG WALL AT LOW PAVILION ROOF WALL DETAIL
1:10

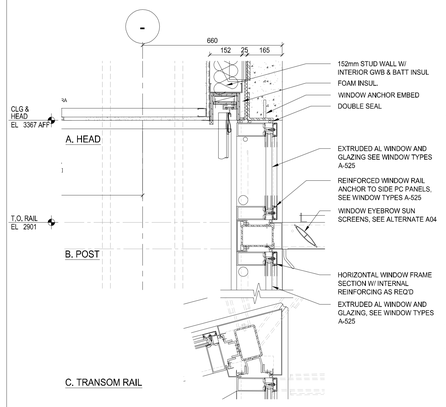

2 CORNER WINDOW OPENING WALL DETAIL
1:10

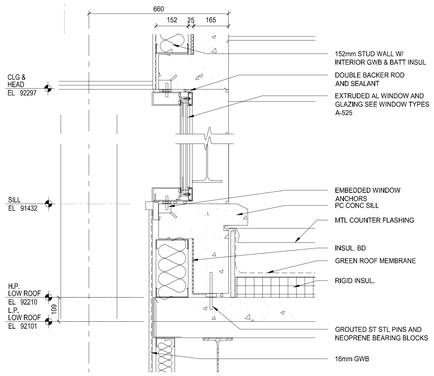

6 EAST WING WINDOW ABOVE PAVILION LOW ROOF WALL DETAIL
1:10

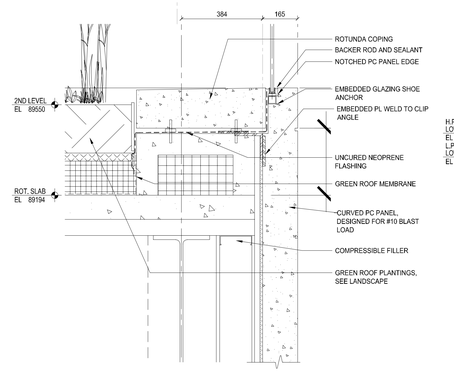

10 ROTUNDA EDGE AT SECURITY PAVILION WALL DETAIL
1:10

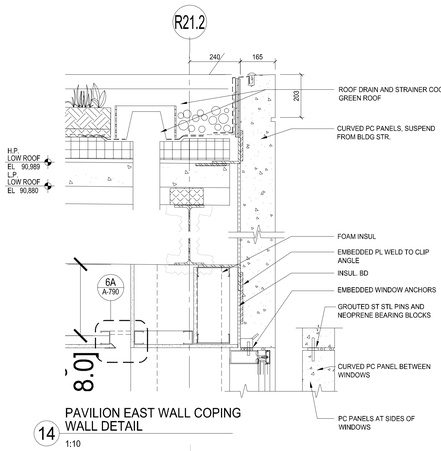

14 PAVILION EAST WALL COPING WALL DETAIL
1:10

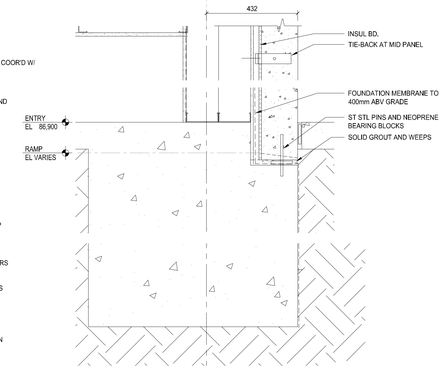

18 LONG WALL AT ENTRY PLAZA WALL DETAIL
1:10

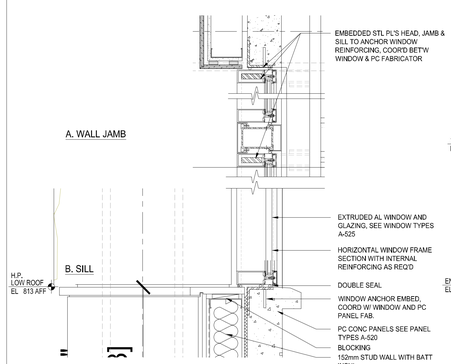

3 DOOR HEAD AT PARKING ENTRY WALL DETAIL
1:10

SEE ALSO DALE ASSOC. DWG'S

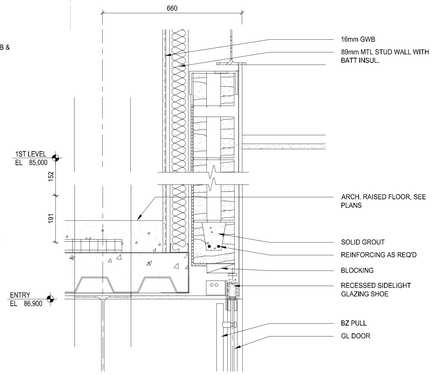

7 PAROLE OFFICER'S DOOR HEAD WALL DETAIL
1:10

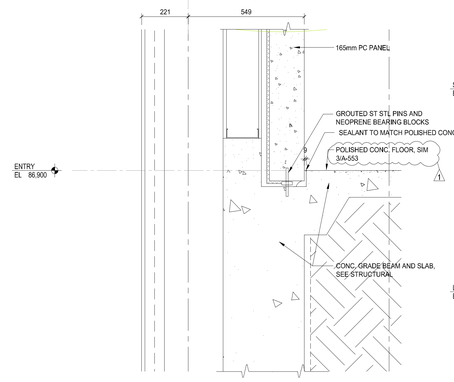

11 ROTUNDA WALL BASE AT PAVILION WALL DETAIL
1:10

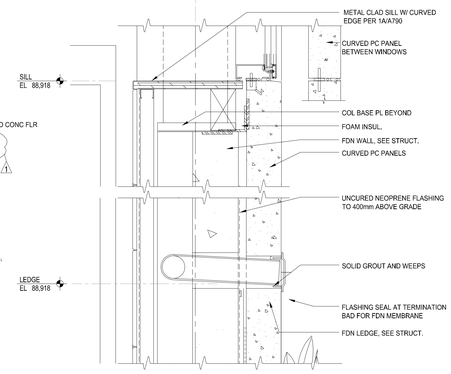

15 PAVILION EAST WALL BASE WALL DETAIL
1:10

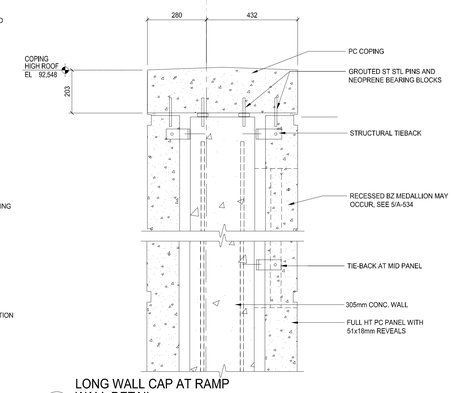

19 LONG WALL CAP AT RAMP WALL DETAIL
1:10

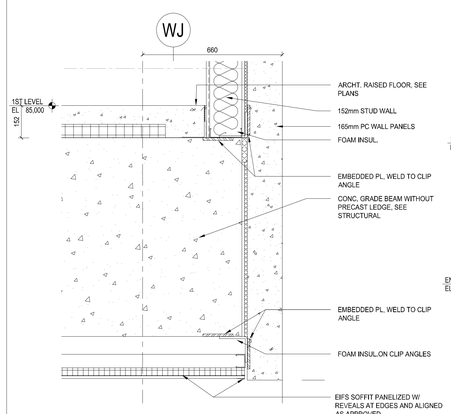

4 DOOR HEAD AT PARKING ENTRY WALL DETAIL
1:10

SEE ALSO DALE ASSOC. DWG'S A-913,914

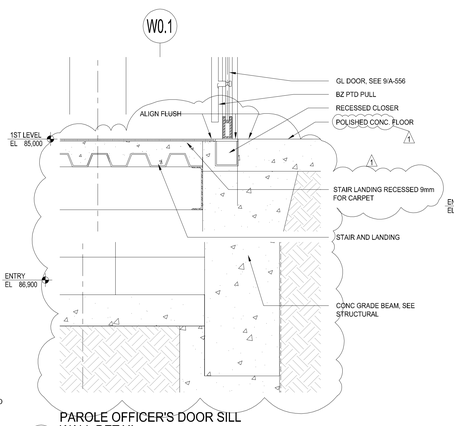

8 PAROLE OFFICER'S DOOR SILL WALL DETAIL
1:10

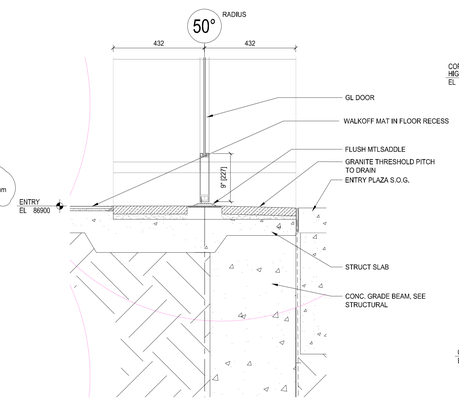

12 MAIN ENTRY THRESHOLD WALL DETAIL
1:10

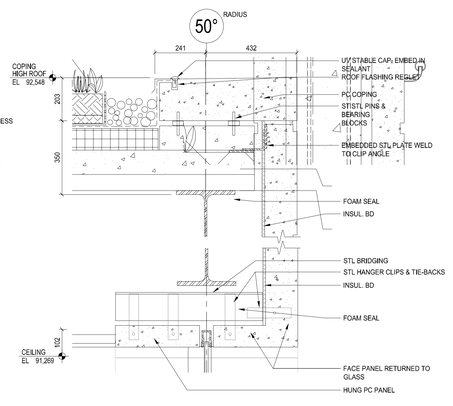

16 LONG WALL AT ENTRY OPENING WALL DETAIL
1:10

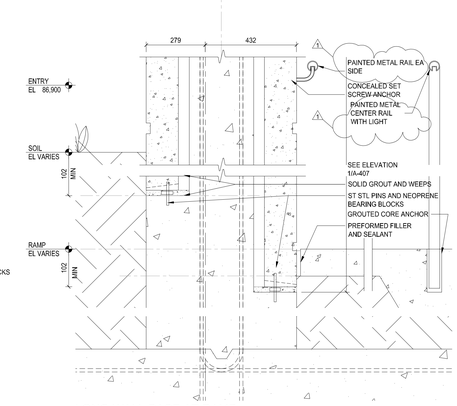

20 LONG WALL BASE AT RAMP WALL DETAIL
1:10

PROPERTY OF THE UNITED STATES GOVERNMENT - FOR OFFICIAL USE ONLY. Do not remove this notice. Properly destroy documents when no longer needed.

GENERAL SERVICES ADMINISTRATION

UNITED STATES COURTHOUSE
JACKSON, MISSISSIPPI

ARCHITECT:
H3 HARDY COLLABORATION ARCHITECTURE
www.h3hc.com
902 BROADWAY, 19TH FLOOR
NEW YORK, NEW YORK 10010

LOCAL ARCHITECT:
DALE AND ASSOCIATES ARCHITECTS, P.A.
ONE JACKSON PLACE, SUITE 250
188 E. CAPITOL STREET
JACKSON, MS 39201

STRUCTURAL ENGINEER:
WALTER P. MOORE
1845 WOODALL RODGERS FRWY., SUITE 1650
DALLAS, TX 75201-2287

MECHANICAL/PLUMBING ENGINEER:
COOKE DOUGLASS FARR LEMONS
3780 I-55 NORTH, STE 101
JACKSON, MS 39211

ELECTRICAL ENGINEER:
WATKINS O'GWYNN
4523 OFFICE PARK DRIVE
JACKSON, MS 39206

CIVIL ENGINEER:
SPENCER-ENGINEERS, INC.
P.O. BOX 4328
JACKSON, MS 39296

LIGHTING:
FISHER MARANTZ STONE
22 WEST 19TH STREET
NEW YORK, NY 10011

ACOUSTICS:
POLYSONICS
5115 MACARTHUR BLVD, NW
WASHINGTON, D.C. 20016

BLAST ENGINEERING:
HINMAN CONSULTING ENGINEERS
350 FIFTH AVENUE, SUITE 4715
NEW YORK, NY 10118

FIRE AND LIFE SAFETY:
ROLF JENSEN & ASSOCIATES
13831 NORTHWEST FREEWAY, SUITE 330
HOUSTON, TX 77040

SECURITY:
SYSTECH GROUP INC.
11260 ROGER BACON DRIVE, SUITE 501
RESTON, VA 20190

COURTS SECURITY:
TYCO FIRE & SECURITY ADT
3601 EISENHOWER AVENUE, THIRD FLOOR
ALEXANDRIA , VA 22304

COURTS TECHNOLOGY:
ELECTRONICS INTERIORS, INC.
1310 SIBLEY MEMORIAL HIGHWAY
MENDOTA, MN 55150

LEED CONSULTING:
THE EPSTEN GROUP, INC.
303 FERGUSON STREET
ATLANTA, GA 30307

VERTICAL TRANSPORTATION:
VAN DEUSEN ASSOCIATES
5 REGENT STREET, SUITE 524
LIVINGSTON, NJ 07039

COST ESTIMATING:
CONSTRUCTION COST SYSTEMS
200 WEST 22ND STREET, SUITE 209
LOMBARD, IL 60148

SIGNAGE:
TWO TWELVE ASSOCIATES, INC.
902 BROADWAY, 20TH FLOOR
NEW YORK, NY 10010

CERTIFICATIONS

KEY PLAN

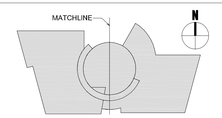

REVISION NOTES

MARK	DATE	DESCRIPTION
1	8/16/2007	VE CHANGES

GRAPHIC SCALE

CONTRACTORS

A/E CON. NO.	
A/E TASK NO.	
CONS. CONTR.	
CONS. WORK	
PRIME A/E	
SUB A/E	
CONSTR. CON.	

BUILDING

NAME	UNITED STATES FEDERAL COURTHOUSE
STREET	COURT STREET
CITY/ST./ZIP	JACKSON, MS 39401
BUILDING NO.	-
OTHER	-
BUILDING NOs.	
FACILITY CODE	-

PROJECT

PROJECT TITLE	NEW UNITED STATES FEDERAL COURTHOUSE JACKSON, MS
PROJECT DESCRIPTION	COURTHOUSE
PROJECT NO.	MS 00149
GSA PM	LAURA SHADIX
SUBMISSION	100% CONSTRUCTION DOC
SUB. DATE	10 September 2007

DRAWING

DRAWING TITLE	WALL SECTION DETAILS
FILE NAME	9-A-532.dwg
FLOOR NO.	
DRAWN BY	PH
DATE DRAFTED:	
CHECKED BY	-
SHEET SIZE:	914 X 1219
DRAWING NO.	A 532
DISCIPLINE	SHEET TYPE	SEQUENCE
SHEET	OF	

K:\Jackson Courthouse\ADD design\VA.05 CD\09\099-DWG\9-A 532-wall det.dwg, 9/5/2007 12:05:18 PM

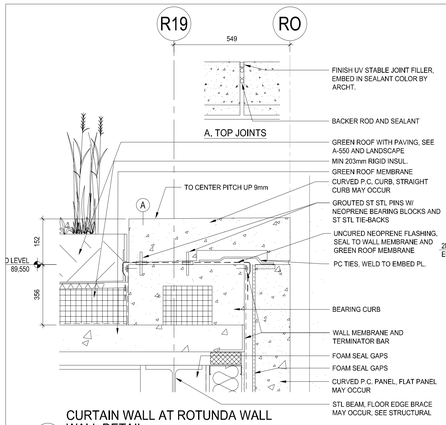

1 CURTAIN WALL AT ROTUNDA WALL WALL DETAIL
1:10

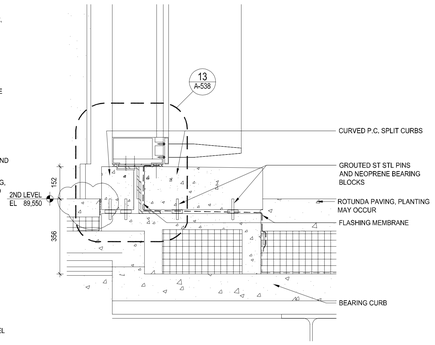

5 CURTAIN WALL AT ROTUNDA CURB WALL DETAIL
1:10

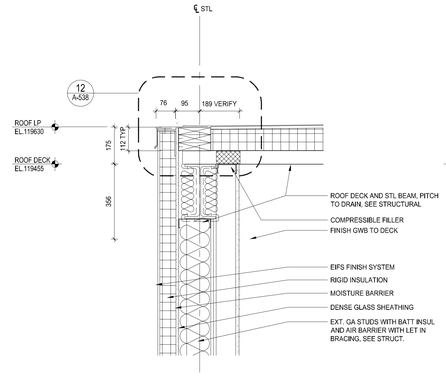

9 BULKHEAD ROOF EDGE AT HIGH SIDE WALL DETAIL
1:10

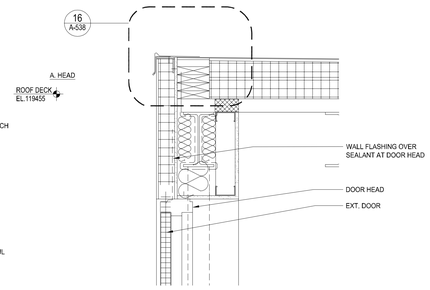

13 BULKHEAD ROOF EDGE AT STAIR DOOR WALL DETAIL
1:10

FOR ADDITIONAL NOTES, SEE DET. 9

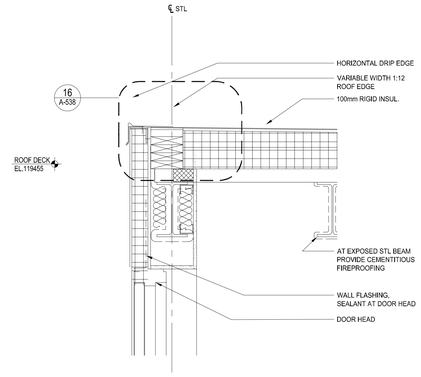

17 BULKHEAD ROOF EDGE AT MECH. ROOM DOOR WALL DETAIL
1:10

FOR ADDITIONAL NOTES, SEE DET. 9

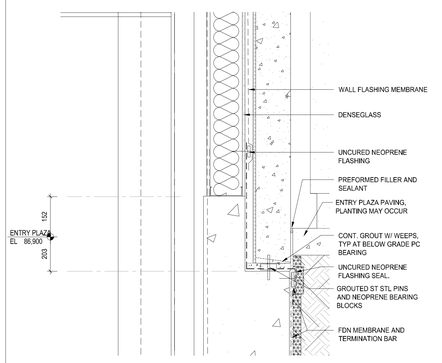

2 EXTERIOR ROTUNDA WALL AT BASE WALL DETAIL
1:10

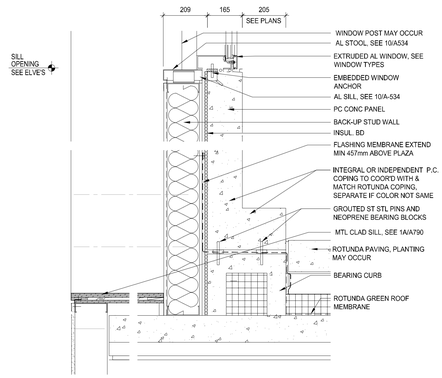

6 PRECAST WALL AT ROTUNDA CURB WALL DETAIL
1:10

SPIRAL RAMP 1:12 SLOPE MAX

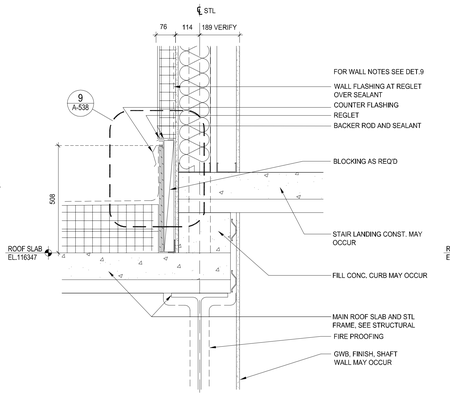

10 BULKHEAD WALL AT STAIR LANDING WALL DETAIL
1:10

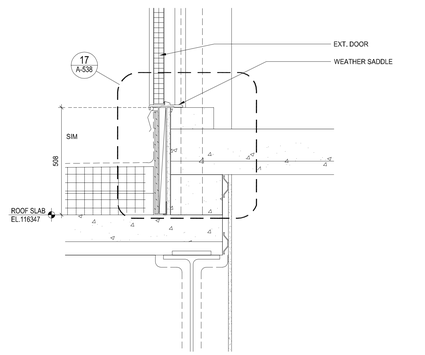

14 BULKHEAD STAIRWAY DOOR SILL WALL DETAIL
1:10

FOR ADDITIONAL NOTES, SEE DET. 10

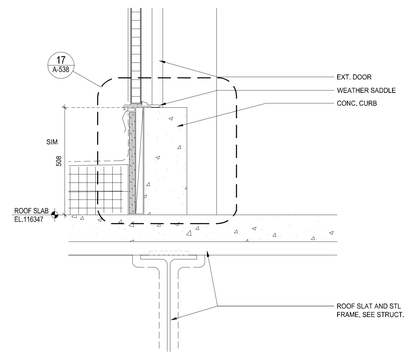

18 BULKHEAD MECH ROOM DOOR SILL WALL DETAIL
1:10

FOR ADDITIONAL NOTES, SEE DET. 10

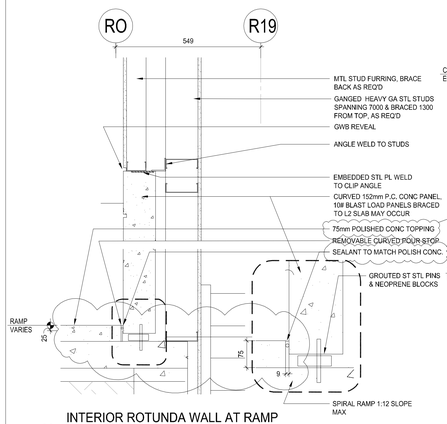

3 INTERIOR ROTUNDA WALL AT RAMP WALL DETAIL
1:10

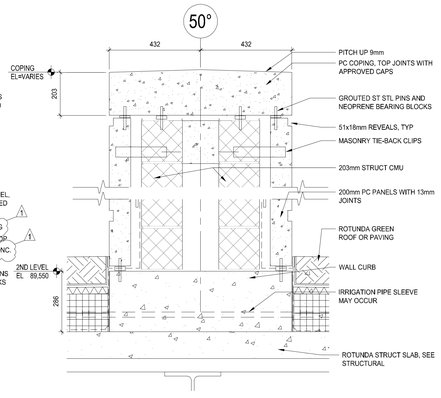

7 LONG WALL ON ROTUNDA PLAZA WALL DETAIL
1:10

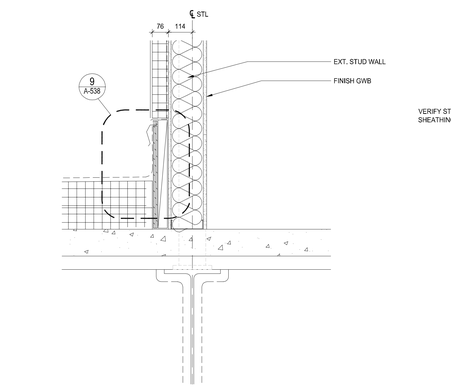

11 BULKHEAD WALL AT MECH ROOM WALL PLAN DETAIL
1:10

FOR ADDITIONAL NOTES SEE DET. 10

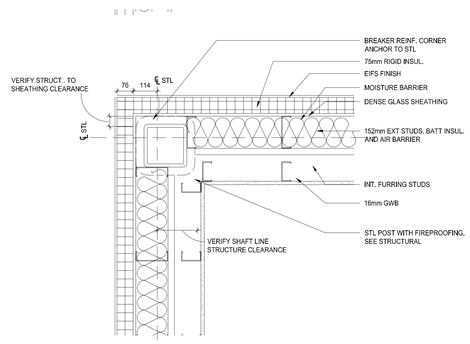

15 BULKHEAD WALL AT SHAFT OPENING WALL DETAIL
1:10

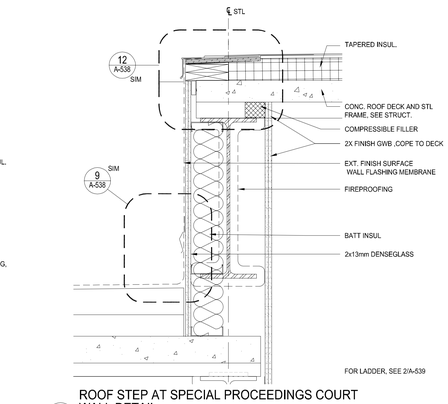

19 ROOF STEP AT SPECIAL PROCEEDINGS COURT WALL DETAIL
1:10

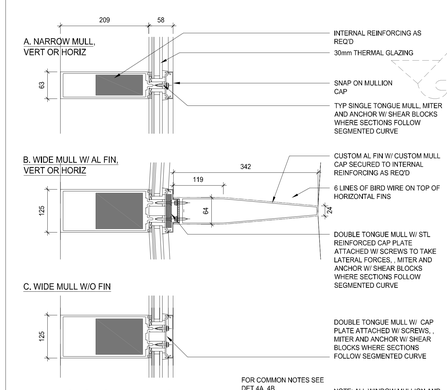

FOR COMMON NOTES SEE DET 4A, 4B

4 SECTION DETAILS WINDOW WALL MULLIONS AND AL FIN
1:5

NOTE: ALL WINDOW MULLION AND BLUE FIN COMPONENTS AND ATTACHMENTS ENGINEERED BY FABRICATOR AND COORDINATED W/ CONNECTING SYSTEMS

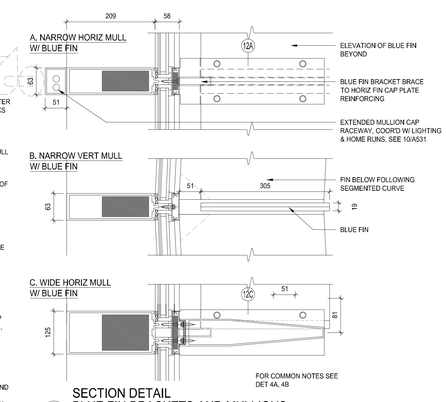

FOR COMMON NOTES SEE DET 4A, 4B

8 SECTION DETAIL BLUE FIN BRACKETS AND MULLIONS
1:5

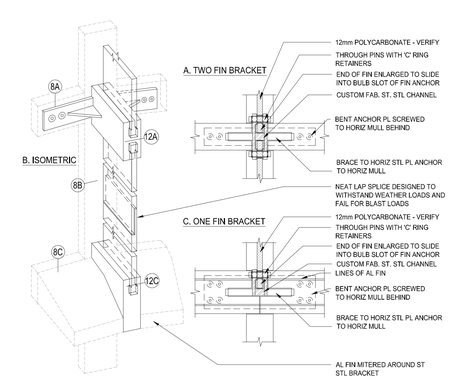

12 CROSS SECTION DETAIL & ISOMETRIC BLUE FIN BRACKETS
1:5

NOTE: ALL WINDOW MULLION AND BLUE FIN COMPONENTS AND ATTACHMENTS ENGINEERED BY FABRICATOR AND COORDINATED W/ CONNECTING SYSTEMS

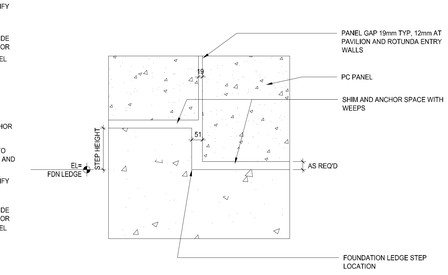

16 ELEVATION DETAIL PRECAST PANELS AT FOUNDATION LEDGE STEP
1:5

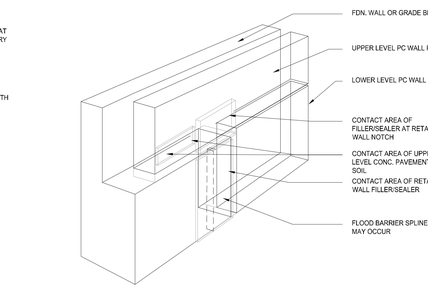

20 PRECAST AND RETAINING WALLS AT FDN LEDGE ISOMETRIC DETAIL
NTS

PROPERTY OF THE UNITED STATES GOVERNMENT - FOR OFFICIAL USE ONLY. Do not remove this notice. Properly destroy documents when no longer needed.

GENERAL SERVICES ADMINISTRATION

UNITED STATES COURTHOUSE
JACKSON, MISSISSIPPI

ARCHITECT:
H3 HARDY COLLABORATION ARCHITECTURE
www.h3hc.com
902 BROADWAY, 19TH FLOOR
NEW YORK, NEW YORK 10010

LOCAL ARCHITECT:
DALE AND ASSOCIATES ARCHITECTS, P.A.
ONE JACKSON PLACE, SUITE 250
188 E. CAPITOL STREET
JACKSON, MS 39201

STRUCTURAL ENGINEER:
WALTER P. MOORE
1845 WOODALL RODGERS FRWY., SUITE 1650
DALLAS, TX 75201-2287

MECHANICAL/PLUMBING ENGINEER:
COOKE DOUGLASS FARR LEMONS
3780 I-55 NORTH, STE 101
JACKSON, MS 39211

ELECTRICAL ENGINEER:
WATKINS O'GWYNN
4523 OFFICE PARK DRIVE
JACKSON, MS 39206

CIVIL ENGINEER:
SPENCER-ENGINEERS, INC.
P.O. BOX 4328
JACKSON, MS 39296

LIGHTING:
FISHER MARANTZ STONE
22 WEST 19TH STREET
NEW YORK, NY 10011

ACOUSTICS:
POLYSONICS
5115 MACARTHUR BLVD, NW
WASHINGTON, D.C. 20016

BLAST ENGINEERING:
HINMAN CONSULTING ENGINEERS
350 FIFTH AVENUE, SUITE 4715
NEW YORK, NY 10118

FIRE AND LIFE SAFETY:
ROLF JENSEN & ASSOCIATES
13831 NORTHWEST FREEWAY, SUITE 330
HOUSTON, TX 77040

SECURITY:
SYSTECH GROUP INC.
11260 ROGER BACON DRIVE, SUITE 501
RESTON, VA 20190

COURTS SECURITY:
TYCO FIRE & SECURITY ADT
3601 EISENHOWER AVENUE, THIRD FLOOR
ALEXANDRIA , VA 22304

COURTS TECHNOLOGY:
ELECTRONICS INTERIORS, INC.
1310 SIBLEY MEMORIAL HIGHWAY
MENDOTA, MN 55150

LEED CONSULTING:
THE EPSTEN GROUP, INC.
303 FERGUSON STREET
ATLANTA, GA 30307

VERTICAL TRANSPORTATION:
VAN DEUSEN ASSOCIATES
5 REGENT STREET, SUITE 524
LIVINGSTON, NJ 07039

COST ESTIMATING:
CONSTRUCTION COST SYSTEMS
200 WEST 22ND STREET, SUITE 209
LOMBARD, IL 60148

SIGNAGE:
TWO TWELVE ASSOCIATES, INC.
902 BROADWAY, 20TH FLOOR
NEW YORK, NY 10010

CERTIFICATIONS

KEY PLAN

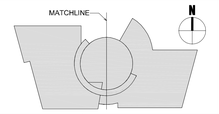

REVISION NOTES

MARK	DATE	DESCRIPTION
1	8/16/2007	VE CHANGES

GRAPHIC SCALE

CONTRACTORS

A/E CON. NO.	
A/E TASK NO.	
CONS. CONTR.	
CONS. WORK	
PRIME A/E	
SUB A/E	
CONSTR. CON.	

BUILDING

NAME	UNITED STATES FEDERAL COURTHOUSE
STREET	COURT STREET
CITY/ST./ZIP	JACKSON, MS 39401
BUILDING NO.	-
OTHER	-
BUILDING NOs.	
FACILITY CODE	-

PROJECT

PROJECT TITLE	NEW UNITED STATES FEDERAL COURTHOUSE JACKSON, MS
PROJECT DESCRIPTION	COURTHOUSE
PROJECT NO.	MS 00149
GSA PM	LAURA SHADIX
SUBMISSION	100% CONSTRUCTION DOC
SUB. DATE	10 September 2007

DRAWING

DRAWING TITLE	WALL SECTION DETAILS
FILE NAME	A-533.dwg
FLOOR NO.	
DRAWN BY	PH — DATE DRAFTED: 04/19/06
CHECKED BY	- — SHEET SIZE: 914 X 1219
DRAWING NO.	DISCIPLINE: A — SHEET TYPE: 5 — SEQUENCE: 33
SHEET	OF

A 533

K:\JacksonCourthouse\ADD design\SLD_D\2600\99-SW\U1A-533-wall det.dwg, 9/3/2007 12:29:46 PM

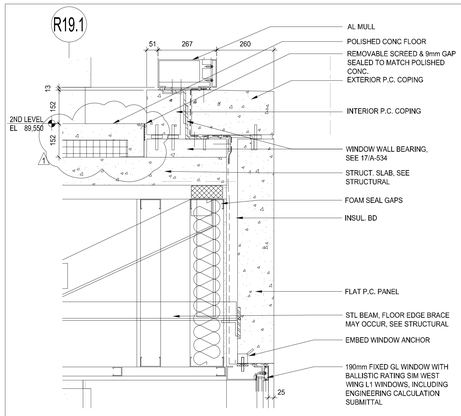

1 LEDGE AND WINDOW AT ROTUNDA NOSE WALL DETAIL
1:10

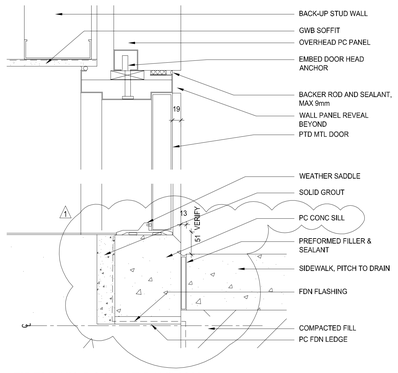

5 FIREMAN'S DOOR AT PAVILION WALL DETAIL
1:5

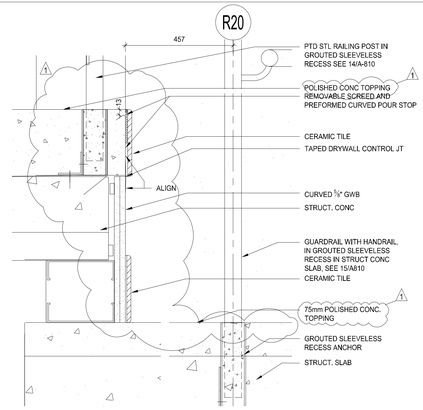

9 TERRAZZO AT LOBBY STEP TO RAMP FINISH DETAIL
1:5

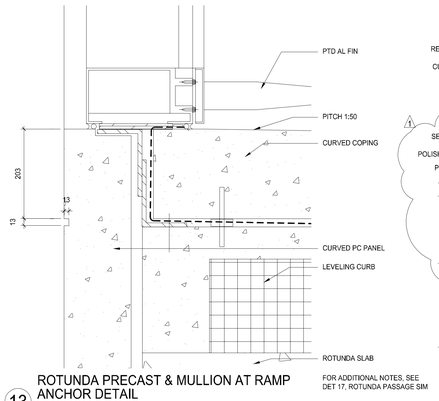

13 ROTUNDA PRECAST & MULLION AT RAMP ANCHOR DETAIL
1:5

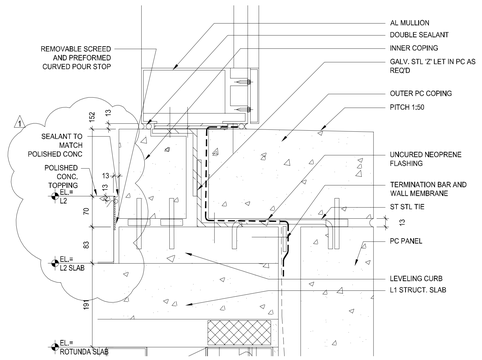

17 ROTUNDA PRECAST & MULLION AT NOSE ANCHOR DETAIL
1:5

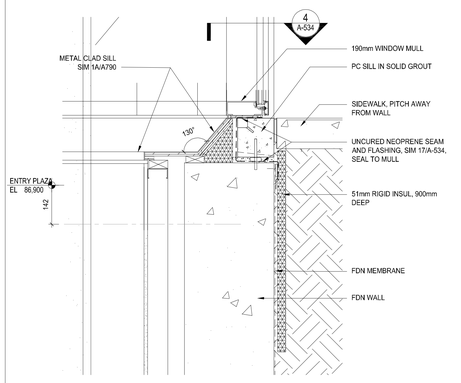

2 ENTRY PLAZA AND L1 WINDOW AT ROTUNDA NOSE WALL DETAIL
1:10

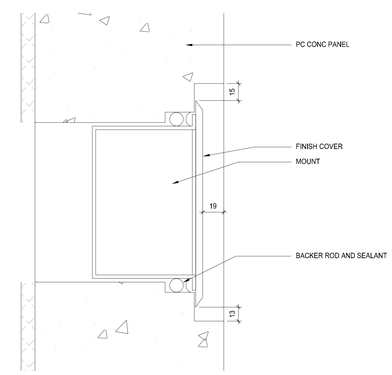

6 RECESSED FIRE CONTROL KEY BOX SECTION DETAIL
1:2

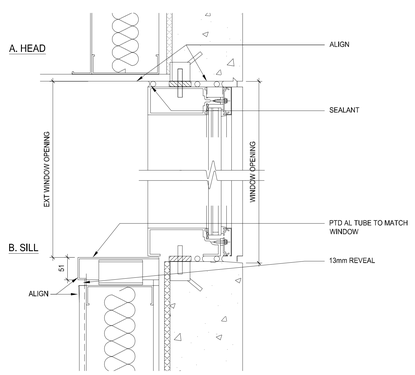

10 TYP. FLUSH WINDOW OPENINGS SECTION DETAIL
1:5

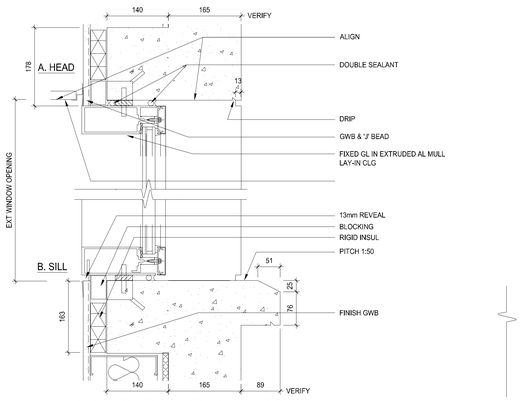

14 TYP. RECESSED WINDOW OPENINGS SECTION DETAIL
1:5

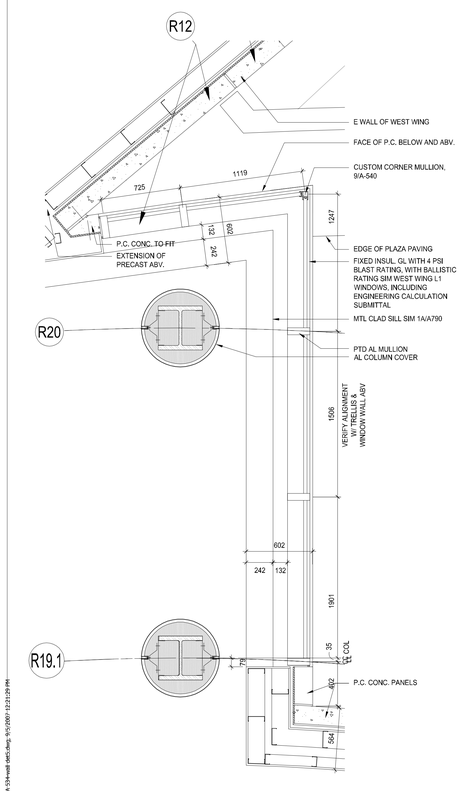

4 BASE PRECAST CORNER AT NOSE PLAN DETAIL
1:20

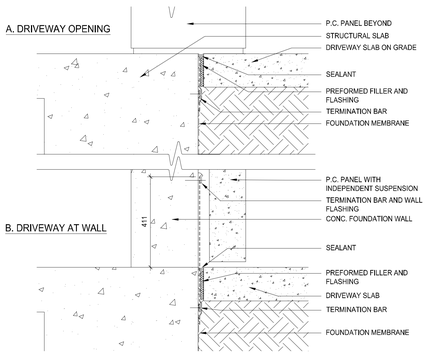

7 PRECAST AT DRIVE PAVEMENT SECTION DETAIL
1:5

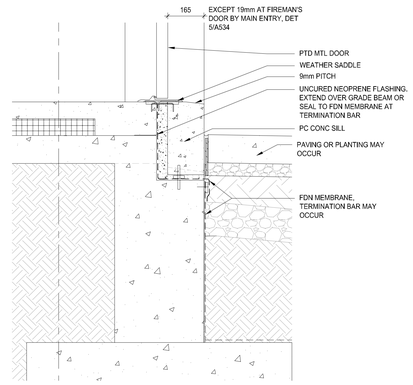

SEE ALSO PANEL TYPES.

11 TYPICAL EXIT DOOR SECTION DETAIL
1:5

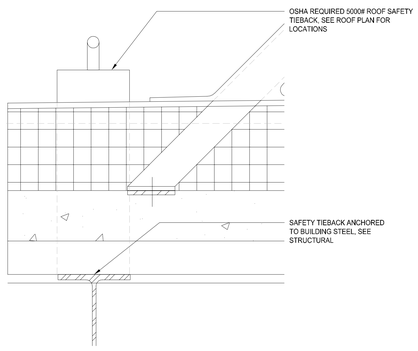

15 OSHA ROOF TIEBACK SECTION DETAIL
1:5

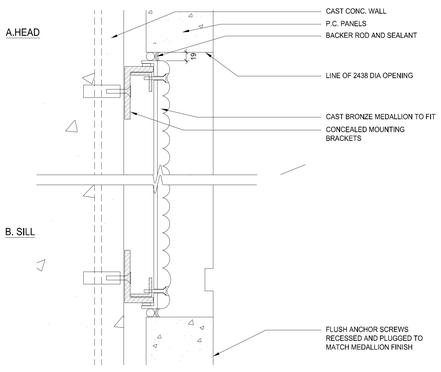

8 ENTRY WALL COURT SEAL SECTION DETAIL
1:5

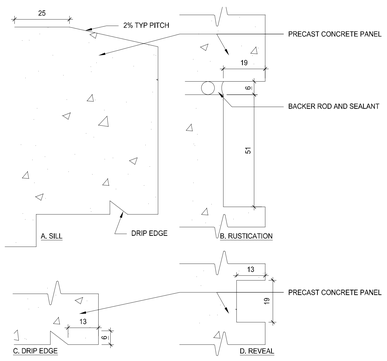

12 TYP P.C. DRIPS AND EDGES SECTION DETAIL
1:1

PROPERTY OF THE UNITED STATES GOVERNMENT - FOR OFFICIAL USE ONLY. Do not remove this notice. Properly destroy documents when no longer needed.

GENERAL SERVICES ADMINISTRATION

UNITED STATES COURTHOUSE
JACKSON, MISSISSIPPI

ARCHITECT:
H3 HARDY COLLABORATION ARCHITECTURE
www.h3hc.com
902 BROADWAY, 19TH FLOOR
NEW YORK, NEW YORK 10010

LOCAL ARCHITECT:
DALE AND ASSOCIATES ARCHITECTS, P.A.
ONE JACKSON PLACE, SUITE 250
188 E. CAPITOL STREET
JACKSON, MS 39201

STRUCTURAL ENGINEER:
WALTER P. MOORE
1845 WOODALL RODGERS FRWY., SUITE 1650
DALLAS, TX 75201-2287

MECHANICAL/PLUMBING ENGINEER:
COOKE DOUGLASS FARR LEMONS
3780 I-55 NORTH, STE 101
JACKSON, MS 39211

ELECTRICAL ENGINEER:
WATKINS O'GWYNN
4523 OFFICE PARK DRIVE
JACKSON, MS 39206

CIVIL ENGINEER:
SPENCER-ENGINEERS, INC.
P.O. BOX 4328
JACKSON, MS 39296

LIGHTING:
FISHER MARANTZ STONE
22 WEST 19TH STREET
NEW YORK, NY 10011

ACOUSTICS:
POLYSONICS
5115 MACARTHUR BLVD, NW
WASHINGTON, D.C. 20016

BLAST ENGINEERING:
HINMAN CONSULTING ENGINEERS
350 FIFTH AVENUE, SUITE 4715
NEW YORK, NY 10118

FIRE AND LIFE SAFETY:
ROLF JENSEN & ASSOCIATES
13831 NORTHWEST FREEWAY, SUITE 330
HOUSTON, TX 77040

SECURITY:
SYSTECH GROUP INC.
11260 ROGER BACON DRIVE, SUITE 501
RESTON, VA 20190

COURTS SECURITY:
TYCO FIRE & SECURITY ADT
3601 EISENHOWER AVENUE, THIRD FLOOR
ALEXANDRIA , VA 22304

COURTS TECHNOLOGY:
ELECTRONICS INTERIORS, INC.
1310 SIBLEY MEMORIAL HIGHWAY
MENDOTA, MN 55150

LEED CONSULTING:
THE EPSTEN GROUP, INC.
303 FERGUSON STREET
ATLANTA, GA 30307

VERTICAL TRANSPORTATION:
VAN DEUSEN ASSOCIATES
5 REGENT STREET, SUITE 524
LIVINGSTON, NJ 07039

COST ESTIMATING:
CONSTRUCTION COST SYSTEMS
200 WEST 22ND STREET, SUITE 209
LOMBARD, IL 60148

SIGNAGE:
TWO TWELVE ASSOCIATES, INC.
902 BROADWAY, 20TH FLOOR
NEW YORK, NY 10010

CERTIFICATIONS

KEY PLAN

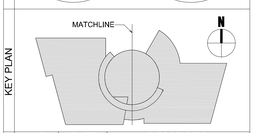

REVISION NOTES

MARK	DATE	DESCRIPTION
1	8/16/2007	VE CHANGES

GRAPHIC SCALE

CONTRACTORS	A/E CON. NO.	
	A/E TASK NO.	
	CONS. CONTR.	
	CONS. WORK	
	PRIME A/E	
	SUB A/E	
	CONSTR. CON.	
BUILDING	NAME	UNITED STATES FEDERAL COURTHOUSE
	STREET	COURT STREET
	CITY/ST./ZIP	JACKSON, MS 39401
	BUILDING NO.	-
	OTHER BUILDING NOs.	-
	FACILITY CODE	-
PROJECT	PROJECT TITLE	NEW UNITED STATES FEDERAL COURTHOUSE JACKSON, MS
	PROJECT DESCRIPTION	COURTHOUSE
	PROJECT NO.	MS 00149
	GSA PM	LAURA SHADIX
	SUBMISSION	100% CONSTRUCTION DOC
	SUB. DATE	10 September 2007
DRAWING	DRAWING TITLE	WALL SECTION DETAILS 5
	FILE NAME	A-534.dwg
	FLOOR NO.	
	DRAWN BY	PH — DATE DRAFTED:
	CHECKED BY	- — SHEET SIZE: 914 X 1219
	DRAWING NO.	A 534 (DISCIPLINE / SHEET TYPE / SEQUENCE)
		SHEET OF